teCom

Technology Components

GENERAL CATALOGUE 2018

The company

It has got a 30 years experience in the development and production of chains and components for movement and transport.
The articles in the present catalogue are designed, produced and tested in accordance with the best quality standards.
Materials and productive process high technology permits to Tecom products at the world top in this field.

The technology

A sophisticated cad/cam system, very modern manufacturing facilities and an efficient storekeeping for finished goods enable us to match very high technology products and maximum reliability.
The flexibility, the high capacity of the productive resources and the warehouse dynamism enable us to guarantee an immediate availability of the products.

Tecom S.r.l.
Via A.M. Ampére, 43 - 42017 Novellara (RE) - Italy
Tel.: (+39) 0522-651203 Fax.: (+39) 0522-756251
Web: http://www.tecomsrl.it e-mail: info@tecomsrl.it

Conveyor components

Conveyor components designed for bottling and food industry, support bases, heads, brackets, guide rail clamps produced in engineering resin and available with stainless steel or zinc plated bolts and nuts.

Special products

Special products on request: chains and accessories, roller chains, cardanic chains, sprockets for chains, corner and straight tracks, etc.

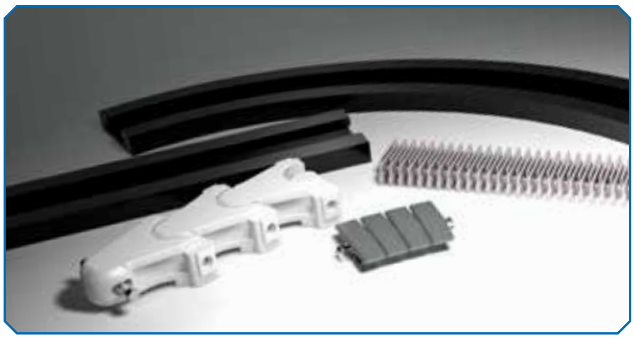

Self-aligning bearing supports

Self-aligning bearing supports made out of engineering resin, resistant to corrosion, ideal for food and pharmaceutical industry.

Supporting and levelling components

Supporting elements made out of engineering resin, zinc plated steel and stainless steel, threaded bushings for round and square tubes, suitable to any kind of application.

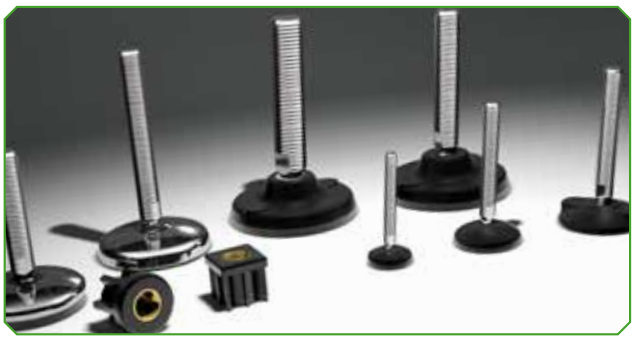

Conveyor components

Part.	Pag.
200	10
201	10
202	11
203	11
204	47
205	47
206	54
207	13
208	12
209	23
210	15
211	13
212	12
213	17
214	17
215	18
216	20
217	23
218	21
219	22
220	24
221	32
222	32
223	33
224	25
225	25
226	34
227	34
228	34
229	42
230	41
231	42
232	43
233	82
234	82
235	26
236	26
237	55
238	56
239	57
240	55
241	57
242	24
243	18
244	21
245	71
246	34
247	35
248	35
249	71
250	68
251	69
252	70
253	70
254	73
255	22
256	33
257	84
258	85
259	85
260	87
261	88
262	88
263	78
264	79
265	79
266	32
267	61
268	75
269	75
270	64
271	64
272	67
273	65
274	66
275	67
276	72
277	62
278	62
279	20
280	19
281	19
282	73
283	81
285	74
286	65
287	66
288	83
289	41
290	46
291	43
293	72
294	37
296	69
297	58
299	126
300	78
301	46
302	68
303	39
304	39
305	39
306	90
307	90
308	91
310	75
311	74
312	58
313	35
314	35
315	36
316	122
317	78
318	96
319	91
320	96
321	96
322	96
323	96
324	56
325	92
326	92
327	93
328	93
329	96
330	107
331	123
332	40
333	59
334	36
335	80
336	80
337	36
338	36
339	101
340	98
341	98
342	99
343	99
344	102
345	100
346	44
347	44
348	45
349	45
350	38
352	124
353	110
354	109
355	94
356	94
357	95
358	95
359	61
360	127
361	114
362	114
363	114
364	114
365	115
366	115
367	115
368	115
369	115
370	113
371	113
372	113
373	109
374	125
375	107
376	83
377	117
379	63
380	63
381	118
382	37
383	38
384	118
385	118
386	37
387	27
388	106
389	119
390	119
391	119
392	27
393	106
394	106
395	106
397	40
398	47
399	71
400	40
401	16
402	14
403	16
404	16
405	50
406	30
407	31
408	28
409	14
410	49
411	49
412	48
413	48
414	81
415	97
416	87
417	84
418	111
419	111
420	110
421	102
422	101
423	100
424	50
425	108
426	108
427	53
428	60
429	122
430	86
431	86
432	89
433	89
434	53
435	59
436	27
437	97
438	112
439	52
440	51
441	29
442	29
443	51
444	121
446	116
448	103
449	104
450	105
451	103
452	104
453	105
454	76
455	76
456	77
457	76
458	77
459	77
460	46
461	120

Contents

Bases

Part. **200** pag. 10

Part. **201** pag. 10

Part. **202** pag. 11

Part. **203** pag. 11

Bearing heads

Part. **212** pag. 12

Part. **208** pag. 12

Part. **211** pag. 13

Part. **207** pag. 13

Part. **409** pag. 14

Part. **402** pag. 14

Connecting joints

Part. **210** pag. 15

Part. **210** pag. 15

Part. **403** pag. 16

Part. **404** pag. 16

Part. **401** pag. 16

Guide rail brackets

Part. **213** pag. 17

Part. **214** pag. 17

Part. **215** pag. 18

Part. **243** pag. 18

Part. **280** pag. 19

Part. **281** pag. 19

Part. **279** pag. 20

Part. **216** pag. 20

Part. **218** pag. 21

Part. **244** pag. 21

Part. **255** pag. 22

Part. **219** pag. 22

Part. **217** pag. 23

Part. **209** pag. 23

Part. **220** pag. 24

Part. **242** pag. 24

Part. **224** pag. 25

Part. **225** pag. 25

Part. **236** pag. 26

Part. **235** pag. 26

Part. **387** pag. 27

Part. **392** pag. 27

New

Part. **436** pag. 27

Part. **408** pag. 28

Part. **408** pag. 28

New

Part. **442** pag. 29

New

Part. **441** pag. 29

Tightening eyebolts

Part. **406** pag. 30

Part. **407** pag. 31

Heads for brackets

Part. **222** pag. 32

Part. **221** pag. 32

Part. **266** pag. 32

Part. **223** pag. 33

Part. **256** pag. 33

Knobs and handles

Part. **226** pag. 34

Part. **227** pag. 34

Part. **228** pag. 34

Part. **246** pag. 34

Part. **247** pag. 35

Part. **248** pag. 35

Part. **313** pag. 35

Part. **314** pag. 35

Part. **315** pag. 36

Part. **334** pag. 36

Part. **337** pag. 36

Part. **338** pag. 36

Part. **382** pag. 37

Part. **386** pag. 37

Part. **294** pag. 37

Part. **383** pag. 38

Part. **350** pag. 38

Part. **303** pag. 39

Part. **304** pag. 39

Part. **305** pag. 39

Part. **397** pag. 40

Part. **400** pag. 40

Part. **332** pag. 40

Guide rail clamps

Part. **230** pag. 41

Part. **289** pag. 41

Part. **229** pag. 42

Part. **231** pag. 42

Part. **232** pag. 43

Part. **291** pag. 43

Part. **346** pag. 44

Part. **347** pag. 44

Part. **348** pag. 45

Part. **349** pag. 45

Part. **290** pag. 46

Part. **301** pag. 46

New

Part. **460** pag. 46

New

Part. **398** pag. 47

Part. **204** pag. 47

Part. **205** pag. 47

Part. **412** pag. 48

Part. **413** pag. 48

Part. **410** pag. 49

Part. **411** pag. 49

Part. **405** pag. 50

Part. **424** pag. 50

New

Part. **443** pag. 51

New

Part. **440** pag. 51

New

Part. **439** pag. 52

Part. **427** pag. 53

Part. **434** pag. 53

Clamps

Part. **206** pag. 54

Part. **237** pag. 55

Part. **240** pag. 55

Part. **238** pag. 56

Part. **324** pag. 56

Part. **239** pag. 57

Part. **241** pag. 57

Part. **297** pag. 58

Part. **312** pag. 58

Part. **435** pag. 59

Part. **333** pag. 59

Shoes

Part. **428** pag. 60

Part. **267** pag. 61

Part. **359** pag. 61

Chain tensioners

Part. **277** pag. 62

Part. **278** pag. 62

Return rollers

Part. **379** pag. 63

Part. **380** pag. 63

Part. **270** pag. 64

Part. **271** pag. 64

Part. **273** pag. 65

Part. **286** pag. 65

Part. **287** pag. 66

Part. **274** pag. 66

Part. **275** pag. 67

Part. **272** pag. 67

Part. **302** pag. 68

Part. **250** pag. 68

Part. **251** pag. 69

Part. **296** pag. 69

Part. **252** pag. 70

Part. **253** pag. 70

Part. **249** pag. 71

Part. **245** pag. 71

Part. **399** pag. 71

Part. **293** pag. 72

Part. **276** pag. 72

Part. **254** pag. 73

Part. **282** pag. 73

Idler wheels

Part. 311 pag. 74

Part. 285 pag. 74

Part. 310 pag. 75

Part. 268 pag. 75

Part. 269 pag. 75

New

Part. 455 pag. 76

New

Part. 454 pag. 76

New

Part. 457 pag. 76

New

Part. 456 pag. 77

New

Part. 458 pag. 77

New

Part. 459 pag. 77

Bearing supports

Part. 300 pag. 78

Part. 317 pag. 78

Part. 263 pag. 78

Part. 264 pag. 79

Part. 265 pag. 79

Bushings

Part. 336 pag. 80

Part. 335 pag. 80

Part. 283 pag. 81

Part. 414 pag. 81

Hinges

Part. 233 pag. 82

Part. 234 pag. 82

Split shaft collars

Part. 288 pag. 83

Part. 376 pag. 83

Modular transfer plates

Part. 257 pag. 84

Part. 417 pag. 84

Part. 258 pag. 85

Part. 259 pag. 85

Part. 430 pag. 86

Part. 431 pag. 86

Part. 260 pag. 87

Part. 416 pag. 87

Part. 261 pag. 88

Part. 262 pag. 88

Part. 432 pag. 89

Part. 433 pag. 89

Product guides and accessories

Part. 306 pag. 90

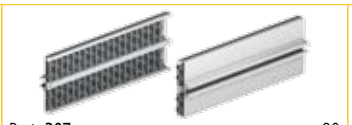
Part. 307 pag. 90

Part. 308 pag. 91

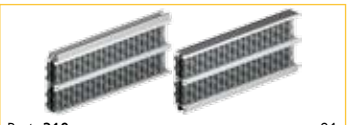
Part. 319 pag. 91

Part. 325 pag. 92

Part. 326 pag. 92

Part. 327 pag. 93

Part. 328 pag. 93

Part. 355 pag. 94

Part. 356 pag. 94

Part. 357 pag. 95

Part. 358 pag. 95

Part. 329 pag. 96

Part. 320 - 321 - 322 - 323 pag. 96

Part. 318 pag. 96

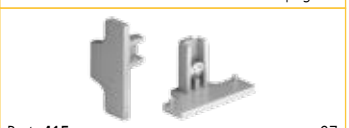
Part. 415 pag. 97

New

Part. 437 pag. 97

Part. 340 pag. 98

Part. 341 pag. 98

Part. 342 pag. 99

Part. 343 pag. 99

Part. 345 pag. 100

Part. 423 pag. 100

Part. 339 pag. 101

Part. 422 pag. 101

Part. 344 pag. 102

Part. 421 pag. 102

New

Part. 448 pag. 103

New

Part. 451 pag. 103

New

Part. 449 pag. 104

New

Part. 452 pag. 104

New

Part. 450 pag. 105

New

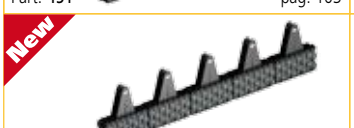
Part. 453 pag. 105

Part. 388 pag. 106

Part. 393 pag. 106

Part. 394 pag. 106

Part. 395 pag. 106

Part. 330 pag. 107

Part. 375 pag. 107

Part. 426 pag. 108

Part. 425 pag. 108

Part. 373 pag. 109

Part. 354 pag. 109

Part. 420 pag. 110

Part. 353 pag. 110

Part. 419 pag. 111

Part. 418 pag. 111

New

Part. 438 pag. 112

Part. 370 pag. 113

Part. 371 pag. 113

Part. 372 pag. 113

Chain guides and accessories

Part. 361 pag. 114

Part. 362 pag. 114

Part. 363 pag. 114

Part. 364 pag. 114

Part. 365 pag. 115

Part. 366 pag. 115

Part. 367 pag. 115

Part. 368 pag. 115

Part. 369 pag. 115

New

Part. 446 pag. 116

Part. 377 pag. 117

Part. 381 pag. 118

Part. 384 pag. 118

Part. 385 pag. 118

Part. 389 pag. 119

Part. 390 pag. 119

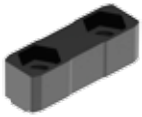
Part. 391 pag. 119

New

Part. 461 pag. 120

New

Part. 444 pag. 121

Accessories for the cross adjustment of the side guides

Part. 429 pag. 122

Part. 316 pag. 122

Part. 331 pag. 123

Part. 352 pag. 124

Part. 374 pag. 125

Part. 299 pag. 126

Process control

Part. 360 pag. 127

Bases

Part. 200 Support base (tripod)

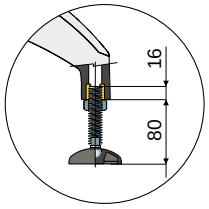

Max protrusion advised

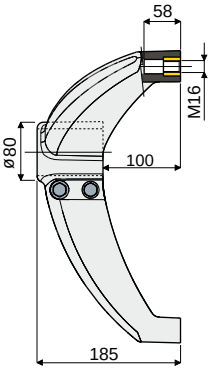

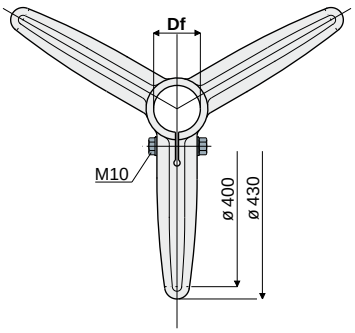

Df Bore for tubes of		Zinc plated bolts and nuts	Stainless steel AISI 304 bolts and nuts	Tube unthreading load	Max static load allowed
(mm)	(Inches)	Code	Code	(N)	(N)
60,3	2"	**200 / 80588**	**200 / 80589**	9600	15800
50,8	-	**200 / 82070**	**200 / 82071**		
48,3	1"1/2	**200 / 80590**	**200 / 80591**		
42,4	1"1/4	**200 / 80592**	**200 / 80593**		
40x40	square tube	**200 / 85108**	**200 / 85109**		
45x45	square tube	**200 / 80271**	**200 / 80753**		

MATERIALS: Base made of reinforced polyamide black colour; threaded bushing made of brass; fixing bolts and nuts made of stainless steel AISI 304 or zinc plated steel.
FEATURES: Max tightening torque 3,6 Kg·m.
BOX QUANTITY: 8 pieces.
ON REQUEST:

- **Bases:** In reinforced polypropylene, other colours.
- **Box quantity:** According to your request.
- **Assembling of:** Bolts and nuts.

Part. 201 Support base (bipod at 120°)

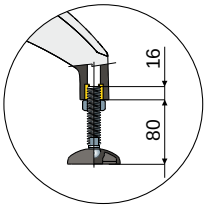

Max protrusion advised

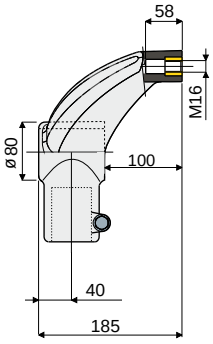

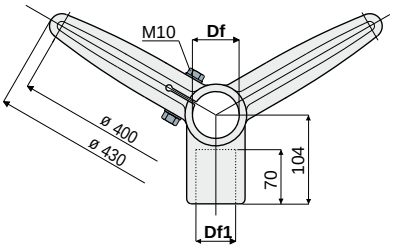

Df Bore for tubes of		Df1 Bore for tubes of		Zinc plated bolts and nuts	Stainless steel AISI 304 bolts and nuts	Tube unthreading load	Max static load allowed
(mm)	(Inches)	(mm)	(Inches)	Code	Code	(N)	(N)
60,3	2"	48,3	1"1/2	**201 / 80612**	**201 / 80613**	9600	15800
60,3	2"	42,4	1"1/4	**201 / 80614**	**201 / 80615**		
50,8	-	48,3	-	**201 / 83200**	**201 / 83201**		
50,8	-	42,4	-	**201 / 83202**	**201 / 83203**		
48,3	1"1/2	48,3	1"1/2	**201 / 80616**	**201 / 80617**		
48,3	1"1/2	42,4	1"1/4	**201 / 80618**	**201 / 80619**		
42,4	1"1/4	42,4	1"1/4	**201 / 80620**	**201 / 80621**		

MATERIALS: Base made of reinforced polyamide black colour; threaded bushing made of brass; fixing bolts and nuts made of stainless steel AISI 304 or zinc plated steel.
FEATURES: Max tightening torque 3,6 Kg·m.
BOX QUANTITY: 8 pieces.
ON REQUEST:

- **Bases:** In reinforced polypropylene, other colours.
- **Box quantity:** According to your request.
- **Assembling of:** Bolts and nuts.

Bases

Support base (bipod at 180°) Part. 202

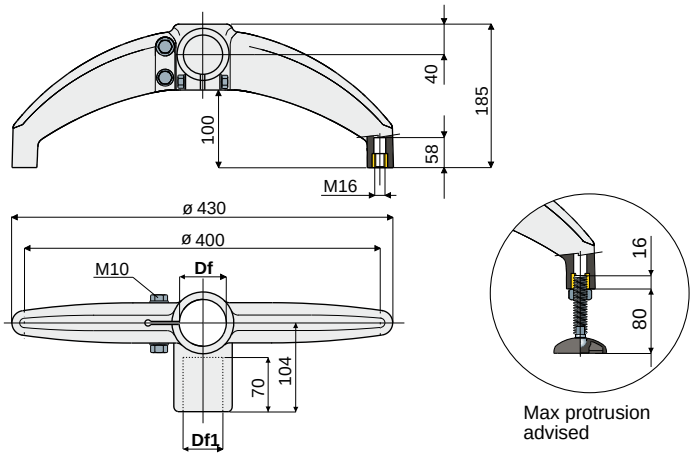

Df Bore for tubes of (mm)	(Inches)	Df1 Bore for tubes of (mm)	(Inches)	Zinc plated bolts and nuts Code	Stainless steel AISI 304 bolts and nuts Code	Tube unthreading load (N)	Max static load allowed (N)
60,3	2"	48,3	1"1/2	202 / 80622	202 / 80623	9600	15800
60,3	2"	42,4	1"1/4	202 / 80624	202 / 80625		
50,8	-	48,3	-	202 / 83204	202 / 83205		
50,8	-	42,4	-	202 / 83206	202 / 83207		
48,3	1"1/2	48,3	1"1/2	202 / 80626	202 / 80627		
48,3	1"1/2	42,4	1"1/4	202 / 80628	202 / 80629		
42,4	1"1/4	42,4	1"1/4	202 / 80630	202 / 80631		

MATERIALS: Base made of reinforced polyamide black colour; threaded bushing made of brass; fixing bolts and nuts made of stainless steel AISI 304 or zinc plated steel.
FEATURES: Max tightening torque 3,6 Kg·m.
BOX QUANTITY: 8 pieces.
ON REQUEST:

- **Bases:** In reinforced polypropylene, other colours.
- **Box quantity:** According to your request.
- **Assembling of:** Bolts and nuts.

Support base (bipod at 180°) Part. 203

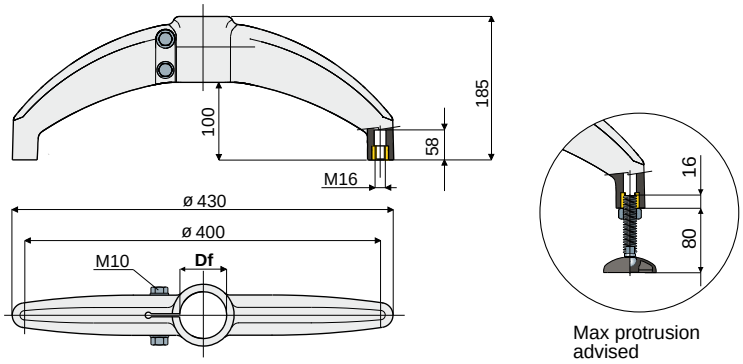

Df Bore for tubes of (mm)	(Inches)	Zinc plated bolts and nuts Code	Stainless steel AISI 304 bolts and nuts Code	Tube unthreading load (N)	Max static load allowed (N)
60,3	2"	203 / 80632	203 / 80633	9600	15800
50,8	-	203 / 82998	203 / 82999		
48,3	1"1/2	203 / 80634	203 / 80635		
42,4	1"1/4	203 / 80636	203 / 80637		

MATERIALS: Base made of reinforced polyamide black colour; threaded bushing made of brass; fixing bolts and nuts made of stainless steel AISI 304 or zinc plated steel.
FEATURES: Max tightening torque 3,6 Kg·m.
BOX QUANTITY: 8 pieces.
ON REQUEST:

- **Bases:** In reinforced polypropylene, other colours.
- **Box quantity:** According to your request.
- **Assembling of:** Bolts and nuts.

Bearing heads

Part. 212 Bearing head

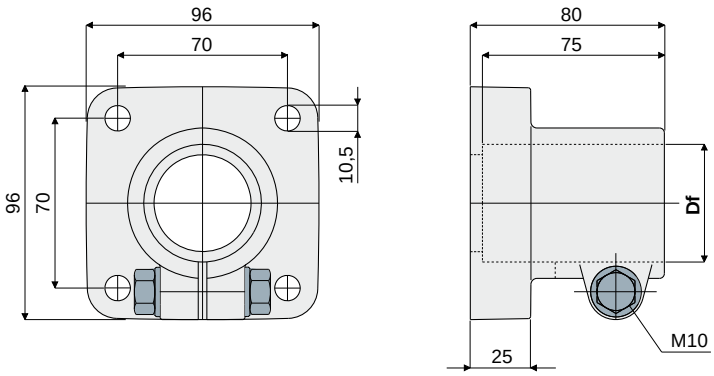

Df Bore for tubes of		Zinc plated bolts and nuts	Stainless steel AISI 304 bolts and nuts
(mm)	(Inches)	Code	Code
48,3	1"1/2	**212 / 80650**	**212 / 80651**
50,8	-	**212 / 83208**	**212 / 83110**

MATERIALS: Bearing head made of reinforced polyamide black colour; bolts and nuts made of stainless steel AISI 304 or zinc plated steel.
FEATURES: Max tightening torque 3,6 Kg·m.
BOX QUANTITY: 8 pieces.
ON REQUEST:

- **Bearing heads:** In reinforced polypropylene, other colours.
- **Box quantity:** According to your request.
- **Assembling of:** Bolts and nuts.

Part. 208 Bearing head

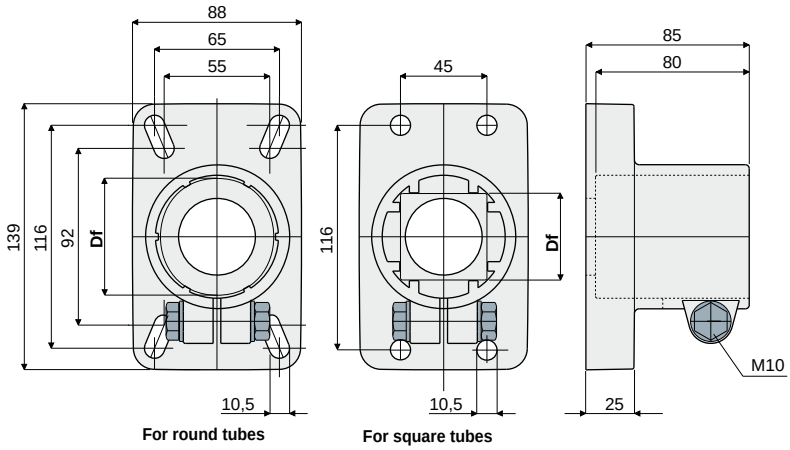

Df Bore for tubes of		Zinc plated bolts and nuts	Stainless steel AISI 304 bolts and nuts
(mm)	(Inches)	Code	Code
60,3	2"	**208 / 80764**	**208 / 80765**
50,8	-	**208 / 82072**	**208 / 82073**
48,3	1"1/2	**208 / 80766**	**208 / 80767**
42,4	1"1/4	**208 / 80768**	**208 / 80769**
40x40	square tube	**208 / 85110**	**208 / 85111**
45x45	square tube	**208 / 80770**	**208 / 80771**

MATERIALS: Bearing head made of reinforced polyamide black colour; bolts and nuts made of stainless steel AISI 304 or zinc plated steel.
FEATURES: Max tightening torque 3,6 Kg·m.
BOX QUANTITY: 8 pieces.
ON REQUEST:

- **Bearing heads:** In reinforced polypropylene, other colours.
- **Box quantity:** According to your request.
- **Assembling of:** Bolts and nuts.

Bearing heads

Side mounting top bracket Part. 211

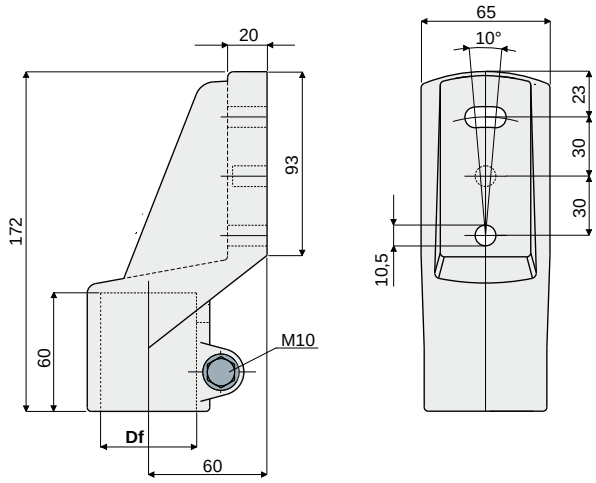

Df Bore for tubes of		Zinc plated bolts and nuts	Stainless steel AISI 304 bolts and nuts
(mm)	(Inches)	Code	Code
48,3	1"1/2	**211 / 80648**	**211 / 80649**

MATERIALS: Top bracket made out of reinforced polyamide black colour; bolts and nuts made out of stainless steel AISI 304 or zinc plated steel.
FEATURES: Max tightening torque 3,6 Kg·m.
BOX QUANTITY: 8 pieces.
ON REQUEST:

- **Top brackets:** In reinforced polypropylene, other colours.
- **Box quantity:** According to your request.
- **Assembling of:** Bolts and nuts.

Side mounting top bracket Part. 207

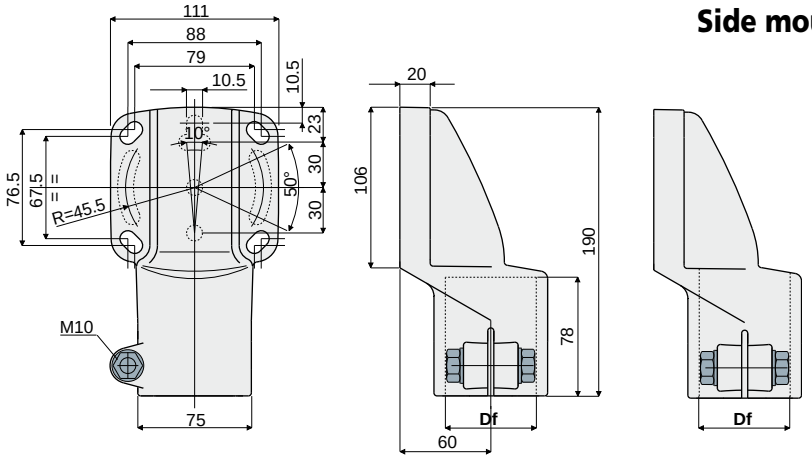

Df Bore for tubes of		Zinc plated bolts and nuts	Stainless steel AISI 304 bolts and nuts
(mm)	(Inches)	Code	Code
60,3	2"	**207 / 80790**	**207 / 80791**
50,8	-	**207 / 83210**	**207 / 83211**
48,3	1"1/2	**207 / 80792**	**207 / 80793**
42,4	1"1/4	**207 / 80794**	**207 / 80795**
40x40	square tube	**207 / 85112**	**207 / 85113**
45x45	square tube	**207 / 80796**	**207 / 80797**
48,3	through hole	**207 / 82632**	**207 / 82633**

MATERIALS: Top bracket made of reinforced polyamide black colour; bolts and nuts made of stainless steel AISI 304 or zinc plated steel.
FEATURES: Max tightening torque 3,6 Kg·m.
BOX QUANTITY: 8 pieces.
ON REQUEST:

- **Top brackets:** In reinforced polypropylene, other colours.
- **Box quantity:** According to your request.
- **Assembling of:** Bolts and nuts.

Bearing heads

Part. 409 Side mounting top bracket

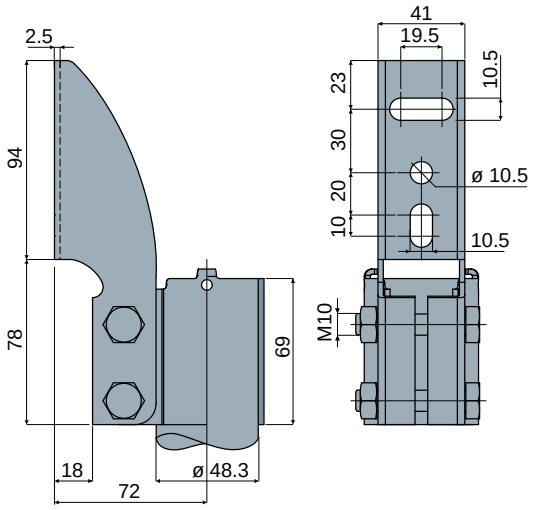

Code
409 / 84440

MATERIALS: Top bracket bolts and nuts made of stainless steel AISI 304.
FEATURES: Supplied complete with bolts and nuts.
BOX QUANTITY: 8 pieces.
ON REQUEST:
- Box quantity: According to your request.
- Assembly of: Bolts and nuts.

Example of application

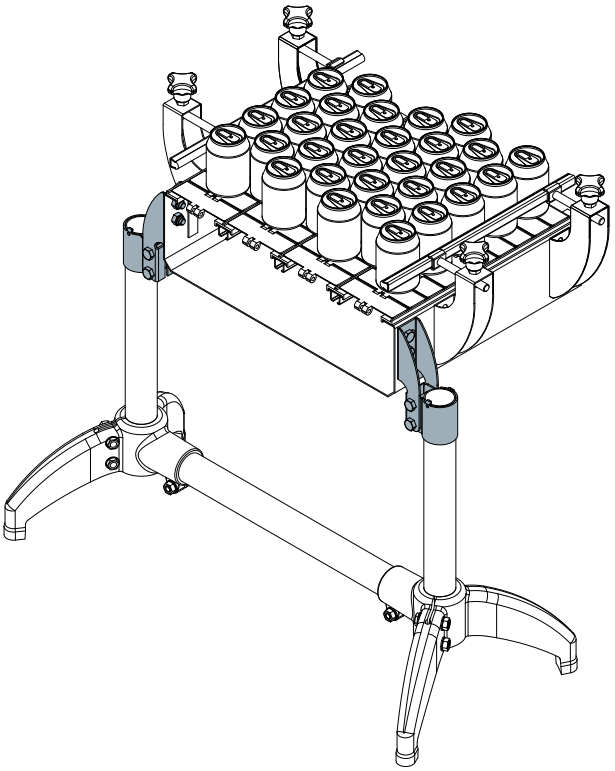

Part. 402 Bearing head

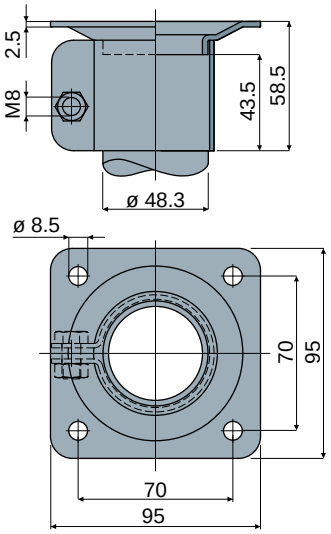

Code
402 / 84324

MATERIALS: Bearing head bolts and nuts made of stainless steel AISI 304.
FEATURES: Supplied complete with bolts and nuts.
BOX QUANTITY: 8 pieces.
ON REQUEST:
- Box quantity: According to your request.
- Assembly of: Bolts and nuts.

Example of application

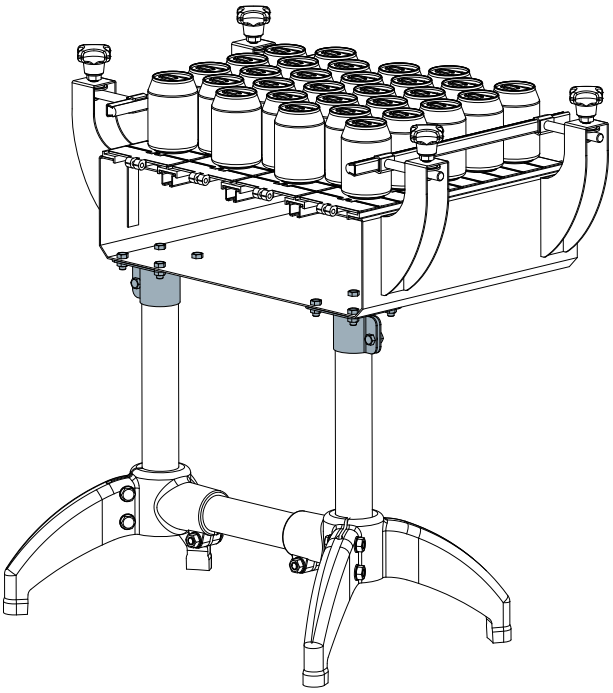

Connecting joints

Connection joint for round tubes Part. 210

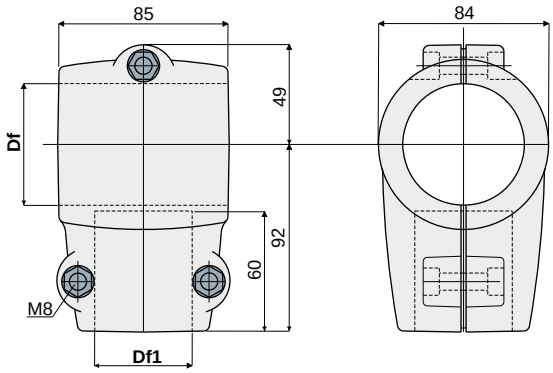

Df Bore for tubes of (mm)	Df Bore for tubes of (Inches)	Df1 Bore for tubes of (mm)	Df1 Bore for tubes of (Inches)	Zinc plated bolts and nuts Code	Stainless steel AISI 304 bolts and nuts Code
60,3	2"	48,3	1"1/2	**210 / 80638**	**210 / 80639**
60,3	2"	42,4	1"1/4	**210 / 80640**	**210 / 80641**
48,3	1"1/2	48,3	1"1/2	**210 / 80642**	**210 / 80643**
48,3	1"1/2	42,4	1"1/4	**210 / 80644**	**210 / 80645**
42,4	1"1/4	42,4	1"1/4	**210 / 80646**	**210 / 80647**

MATERIALS: Joint made of reinforced polyamide black colour; bolts and nuts made of stainless steel AISI 304 or zinc plated steel.
FEATURES: Max tightening torque 2 Kg·m.
BOX QUANTITY: 8 pieces.
ON REQUEST:

- **Joints:** In reinforced polypropylene, other colours.
- **Box quantity:** According to your request.
- **Assembling of:** Bolts and nuts.

Connection joint for round tubes Part. 210

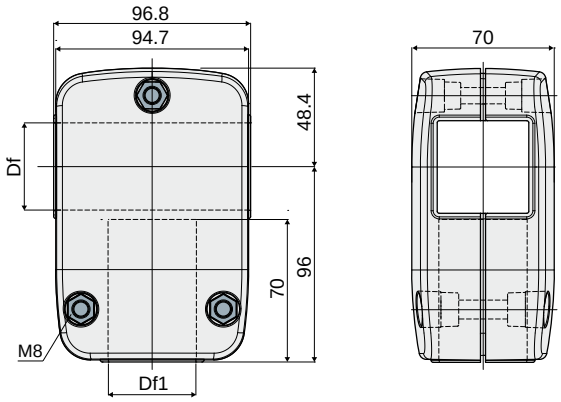

Df Bore for tubes of (mm)	Df1 Bore for tubes of (mm)	Zinc plated bolts and nuts Code	Stainless steel AISI 304 bolts and nuts Code
40x40	40x40	**210 / 85114**	**210 / 85115**
45x45	45x45	**210 / 84132**	**210 / 84133**

MATERIALS: Joint made of reinforced polyamide black colour; bolts and nuts made of stainless steel AISI 304 or zinc plated steel.
FEATURES: Max tightening torque 2 Kg·m.
BOX QUANTITY: 8 pieces.
ON REQUEST:

- **Joints:** In reinforced polypropylene, other colours.
- **Box quantity:** According to your request.
- **Assembling of:** Bolts and nuts.

Connecting joints

Part. 403 Connection joint

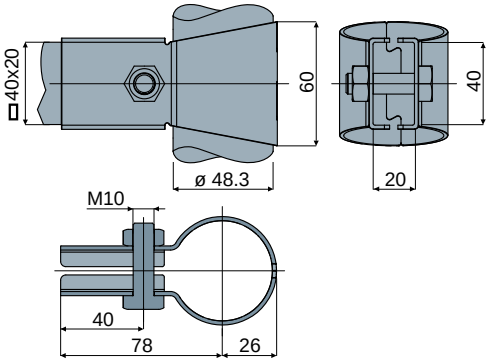

Example of application

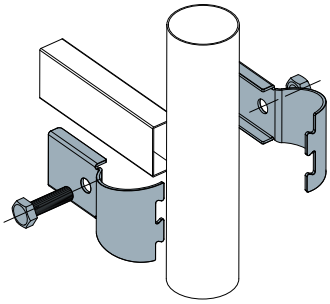

Code
403 / 84325

MATERIALS: Joint, screw and nut made of stainless steel AISI 304.
FEATURES: Supplied complete with bolts and nuts.
BOX QUANTITY: 8 pieces.
ON REQUEST:
- Box quantity: According to your request.
- Assembly of: Bolts and nuts.

Part. 404 Connection joint

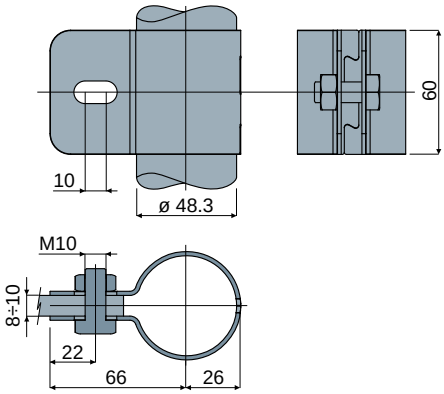

Example of application

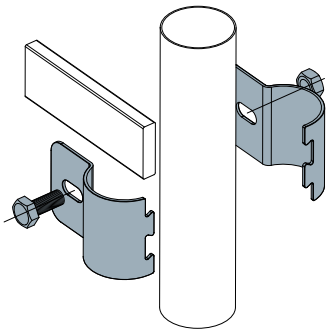

Code
404 / 84326

MATERIALS: Joint, screw and nut made of stainless steel AISI 304.
FEATURES: Supplied complete with bolts and nuts.
BOX QUANTITY: 8 pieces.
ON REQUEST:
- Box quantity: According to your request.
- Assembly of: Bolts and nuts.

Part. 401 Connection joint

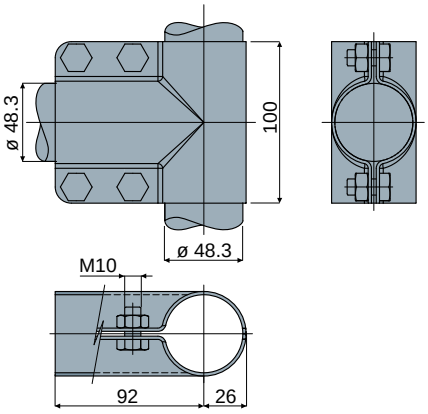

Example of application

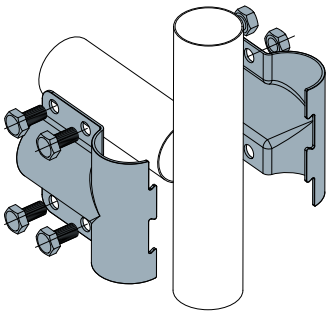

Code
401 / 84323

MATERIALS: Joint, screws and nuts made of stainless steel AISI 304.
FEATURES: Supplied complete with bolts and nuts.
BOX QUANTITY: 8 pieces.
ON REQUEST:
- Box quantity: According to your request.
- Assembly of: Bolts and nuts.

Guide rail brackets

Guide rail bracket Part. 213

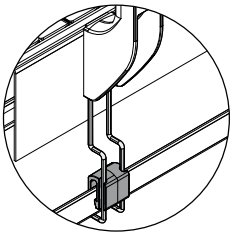

Presetting for
drip tray support
(see on page 26)

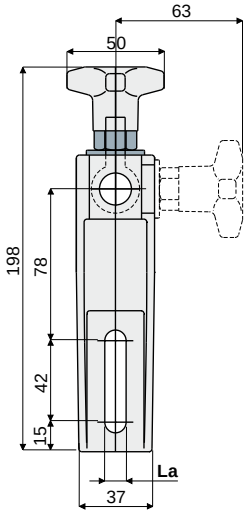

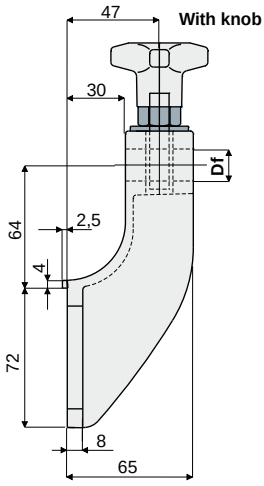

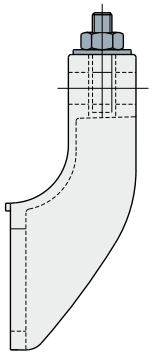

La (9 mm slot)		
Df Bore for pin of (mm)	With knob Code	With nut Code
12	213 / 81176	213 / 82105
14	213 / 82102	213 / 82107
16	213 / 82104	213 / 82109

La (11 mm slot)		
Df Bore for pin of (mm)	With knob Code	With nut Code
12	213 / 80652	213 / 80653
14	213 / 80654	213 / 80655
16	213 / 80656	213 / 80657

MATERIALS: Bracket and knob made of reinforced polyamide black colour; hexagonal insert made of nickel plated brass; eyebolt, nut and washer made of stainless steel AISI 304.
FEATURES: Max tightening torque 4 Kg·m.
BOX QUANTITY: 24 pieces.
ON REQUEST:

- **Brackets:** In reinforced polypropylene, other colours.
- **Box quantity:** According to your request.

Guide rail bracket (with adjustable head) Part. 214

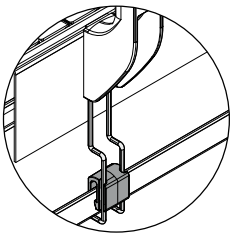

Presetting for
drip tray support
(see on page 26)

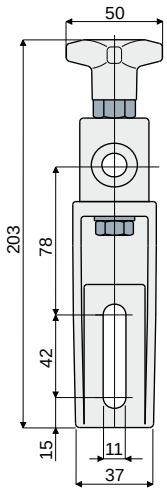

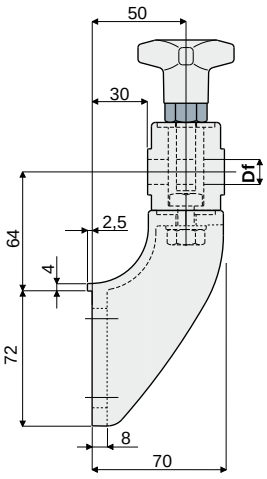

Df Bore for pin of (mm)	Code
12	214 / 80755
14	214 / 80756
16	214 / 80757

MATERIALS: Bracket and knob made of reinforced polyamide black colour; hexagonal insert made of nickel plated brass; eyebolt, nut and washer made of stainless steel AISI 304.
FEATURES: Max tightening torque 4 Kg·m.
BOX QUANTITY: 24 pieces.
ON REQUEST:

- **Brackets:** In reinforced polypropylene, other colours.
- **Box quantity:** According to your request.

Guide rail brackets

Part. 215 Guide rail bracket
(with adjustable head)

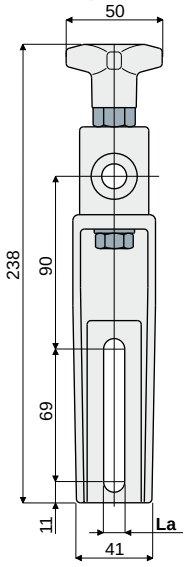

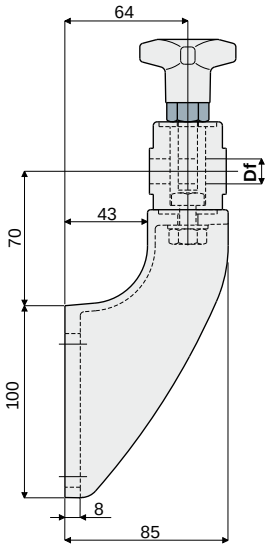

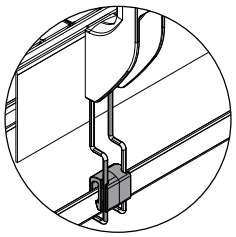

Presetting for drip tray support (see on page 26)

Df Bore for pin of (mm)	La (9 mm slot) Code	La (11 mm slot) Code
12	215 / 82106	215 / 80658
14	215 / 82108	215 / 80659
16	215 / 82110	215 / 80660

MATERIALS: Bracket and knob made of reinforced polyamide black colour; hexagonal insert made of nickel plated brass; eyebolt, nut and washer made of stainless steel AISI 304.
FEATURES: Max tightening torque 4 Kg·m.
BOX QUANTITY: 24 pieces.
ON REQUEST:
- Brackets: In reinforced polypropylene, other colours.
- Box quantity: According to your request.

Part. 243 Guide rail bracket
(reinforced type with adjustable head)

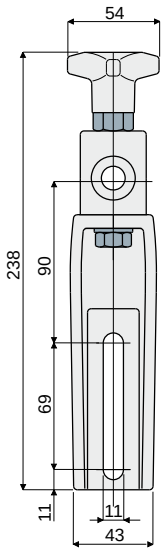

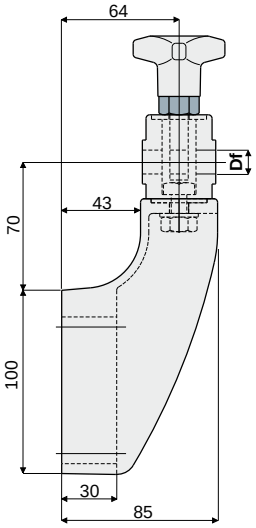

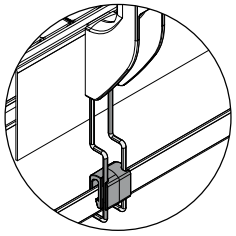

Presetting for drip tray support (see on page 26)

Df Bore for pin of (mm)	Code
12	243 / 81003
14	243 / 81004
16	243 / 81005

MATERIALS: Bracket and knob made of reinforced polyamide black colour; hexagonal insert made of nickel plated brass; eyebolt, screw, nut and washer made of stainless steel AISI 304.
FEATURES: To be used for heavy applications, suitable in conveyors with more ways, both in accumulation and curve.
Max tightening torque 4 Kg·m.
BOX QUANTITY: 24 pieces.
ON REQUEST:
- Brackets: In reinforced polypropylene, other colours.
- Box quantity: According to your request.

Guide rail brackets

Guide rail bracket Part. 280
(with adjustable high type head)

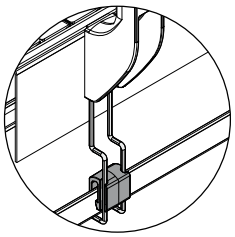

Presetting for
drip tray support
(see on page 26)

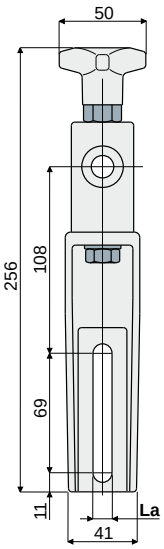

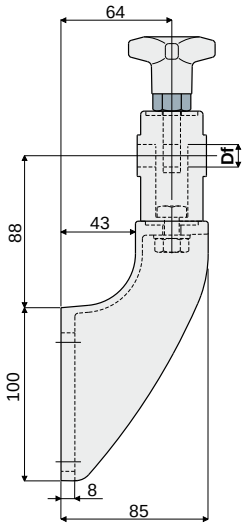

Df Bore for pin of (mm)	La (9 mm slot) Code	La (11 mm slot) Code
12	280 / 82150	280 / 82127
14	280 / 82151	280 / 82128
16	280 / 82152	280 / 82129

MATERIALS: Bracket and knob made of reinforced polyamide black colour; hexagonal insert made of nickel plated brass; eyebolt, nut and washer made of stainless steel AISI 304.
FEATURES: Max tightening torque 4 Kg·m.
BOX QUANTITY: 24 pieces.
ON REQUEST:
- **Brackets:** In reinforced polypropylene, other colours.
- **Box quantity:** According to your request.

Guide rail bracket Part. 281
(reinforced type with adjustable high type head)

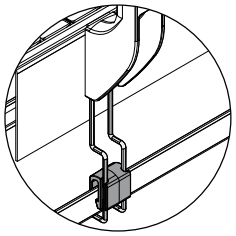

Presetting for
drip tray support
(see on page 26)

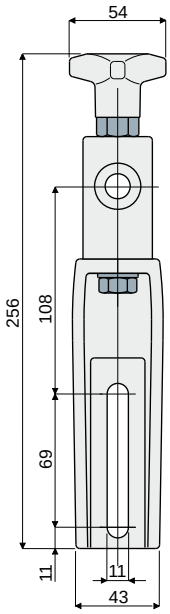

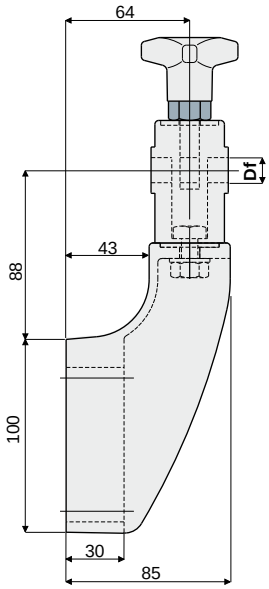

Df Bore for pin of (mm)	Code
12	281 / 82130
14	281 / 82131
16	281 / 82132

MATERIALS: Bracket and knob made of reinforced polyamide black colour; hexagonal insert made of nickel plated brass; eyebolt, screw, nut and washer made of stainless steel AISI 304.
FEATURES: To be used for heavy applications, suitable in conveyors with more ways, both in accumulation and curve.
Max tightening torque 4 Kg·m.
BOX QUANTITY: 24 pieces.
ON REQUEST:
- **Brackets:** In reinforced polypropylene, other colours.
- **Box quantity:** According to your request.

Guide rail brackets

Part. 279 Guide rail bracket
(with adjustable head)

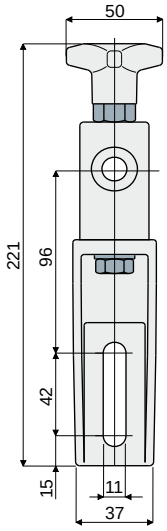

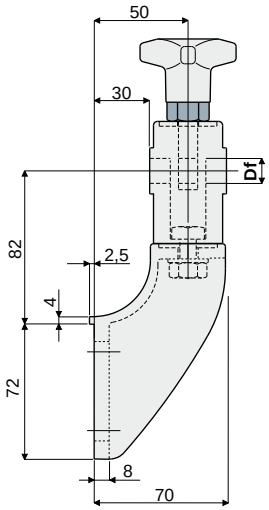

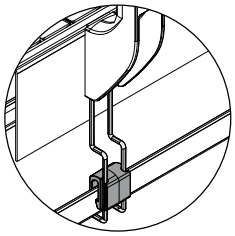

Presetting for
drip tray support
(see on page 26)

Df Bore for pin of (mm)	Code
12	279 / 82124
14	279 / 82125
16	279 / 82126

MATERIALS: Bracket and knob made of reinforced polyamide black colour; hexagonal insert made of nickel plated brass; eyebolt, nut and washer made of stainless steel AISI 304.
FEATURES: Max tightening torque 4 Kg·m.
BOX QUANTITY: 24 pieces.
ON REQUEST:
- **Brackets:** In reinforced polypropylene, other colours.
- **Box quantity:** According to your request.

Part. 216 Guide rail bracket
(with metal adjustable head)

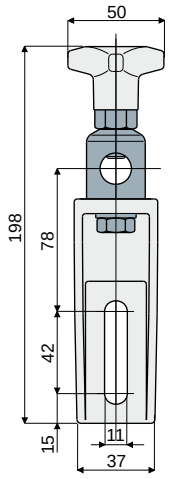

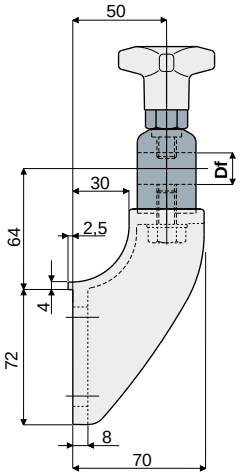

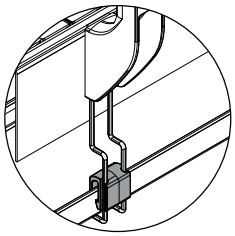

Presetting for
drip tray support
(see on page 26)

Df Bore for pin of (mm)	Head made out of nickel plated brass Code	Head made out of stainless steel AISI 304 Code
14 - 16	216 / 80758	216 / 80759

MATERIALS: Bracket and knob made out of reinforced polyamide black colour; head made out of stainless steel AISI 304 or nickel plated brass; hexagonal insert made out of nickel plated brass; screw and washer made out of stainless steel AISI 304.
FEATURES: Possibility to use pins with diameter 14 and 16 mm.
Max tightening torque 4 Kg·m.
BOX QUANTITY: 24 pieces.
ON REQUEST:
- **Brackets:** In reinforced polypropylene, other colours.
- **Box quantity:** According to your request.

Guide rail brackets

Guide rail bracket
(with metal adjustable head)

Part. **218**

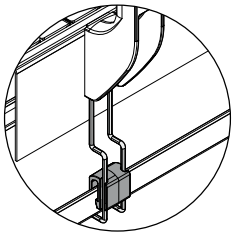

Presetting for
drip tray support
(see on page 26)

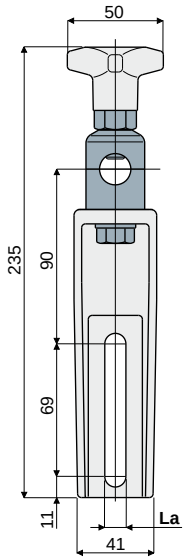

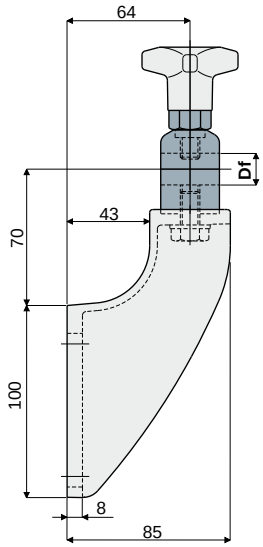

La (9 mm slot)		
Df Bore for pin of	Head made out of nickel plated brass	Head made out of stainless steel AISI 304
(mm)	Code	Code
14 - 16	**218 / 82112**	**218 / 82113**

La (11 mm slot)		
Df Bore for pin of	Head made out of nickel plated brass	Head made out of stainless steel AISI 304
(mm)	Code	Code
14 - 16	**218 / 80662**	**218 / 80663**

MATERIALS: Bracket and knob made out of reinforced polyamide black colour; head made out of stainless steel AISI 304 or nickel plated brass; hexagonal insert made out of nickel plated brass; screw and washer made out of stainless steel AISI 304.
FEATURES: Possibility to use pins with diameter 14 and 16 mm.
Max tightening torque 4 Kg·m.
BOX QUANTITY: 24 pieces.

- ON REQUEST:
- **Brackets:** In reinforced polypropylene, other colours.
- **Box quantity:** According to your request.

Guide rail bracket
(reinforced type with metal adjustable head)

Part. **244**

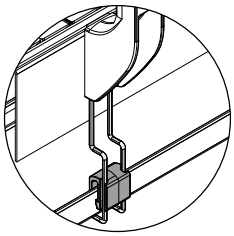

Presetting for
drip tray support
(see on page 26)

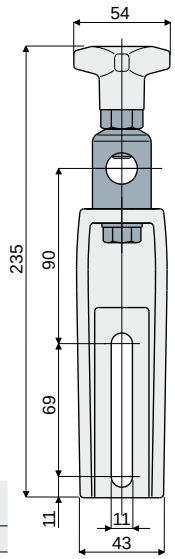

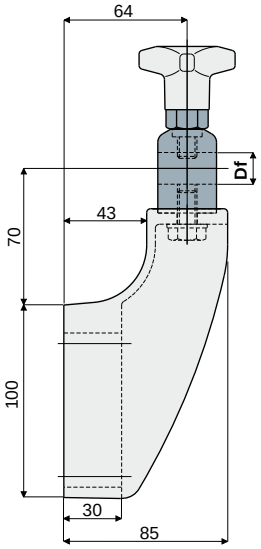

Df Bore for pin of	Head made out of nickel plated brass	Head made out of stainless steel AISI 304
(mm)	Code	Code
14 - 16	**244 / 81006**	**244 / 81007**

MATERIALS: Bracket and knob made out of reinforced polyamide black colour; head made out of stainless steel AISI 304 or nickel plated brass; hexagonal insert made out of nickel plated brass; screw and washer made out of stainless steel AISI 304.
FEATURES: To be used for heavy applications, suitable in conveyors with more ways, both in accumulation and curve.
Possibility to use pins with diameter 14 and 16 mm.
Max tightening torque 4 Kg·m.
BOX QUANTITY: 24 pieces.
ON REQUEST:

- **Brackets:** In reinforced polypropylene, other colours.
- **Box quantity:** According to your request.

Guide rail brackets

Part. 255 Guide rail bracket
(reinforced type with adjustable head)

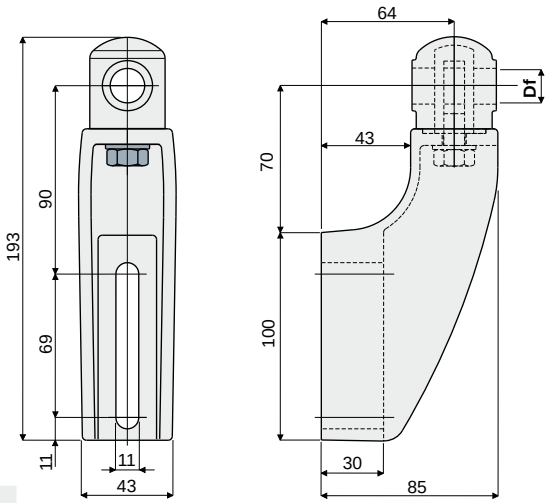

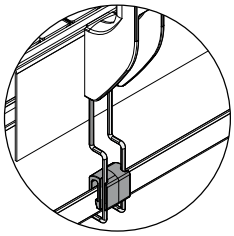

Presetting for
drip tray support
(see on page 26)

Df Bore for pin of (mm)	Code
12	255 / 81008
14	255 / 81009
16	255 / 81010

MATERIALS: Bracket and head made of reinforced polyamide black colour; eyebolt, nut and washer made of stainless steel AISI 304.
FEATURES: To be used for heavy applications, suitable in conveyors with more ways, both in accumulation and curve.
Max tightening torque 4 Kg·m.
BOX QUANTITY: 24 pieces.
ON REQUEST:
- Brackets: In reinforced polypropylene, other colours.
- Box quantity: According to your request.

Part. 219 Guide rail bracket
(with adjustable head)

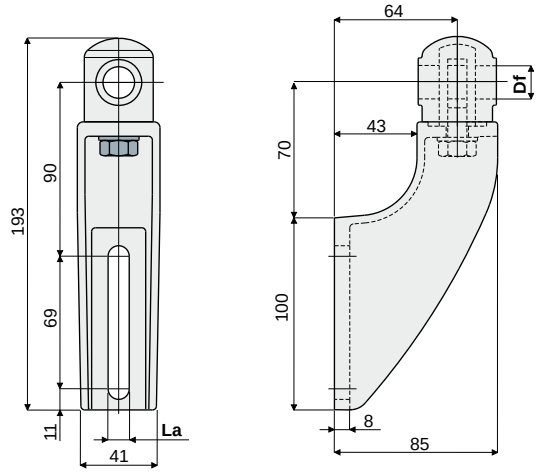

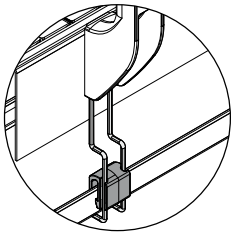

Presetting for
drip tray support
(see on page 26)

Df Bore for pin of	La (9 mm slot)	La (11 mm slot)
(mm)	Code	Code
12	219 / 82114	219 / 80664
14	219 / 82115	219 / 80665
16	219 / 82116	219 / 80666

MATERIALS: Bracket and head made of reinforced polyamide black colour; eyebolt, nut and washer made of stainless steel AISI 304.
FEATURES: Max tightening torque 4 Kg·m.
BOX QUANTITY: 24 pieces.
ON REQUEST:
- Brackets: In reinforced polypropylene, other colours.
- Box quantity: According to your request.

Guide rail brackets

Guide rail bracket
(with adjustable head)

Part. **217**

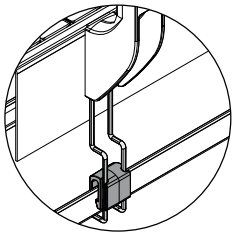

Presetting for
drip tray support
(see on page 26)

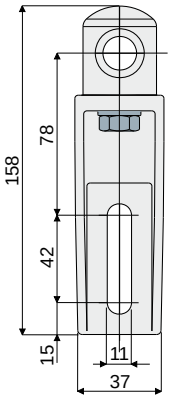

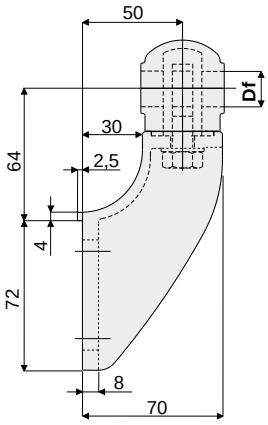

Df Bore for pin of (mm)	Code
12	217 / 80760
14	217 / 80761
16	217 / 80762

MATERIALS: Bracket and head made of reinforced polyamide black colour; eyebolt, nut and washer made of stainless steel AISI 304.
FEATURES: Max tightening torque 4 Kg·m.
BOX QUANTITY: 24 pieces.
ON REQUEST:

- **Brackets:** In reinforced polypropylene, other colours.
- **Box quantity:** According to your request.

Guide rail bracket
(for adjustable heads)

Part. **209**

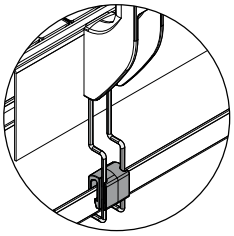

Presetting for
drip tray support
(see on page 26)

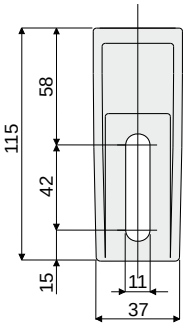

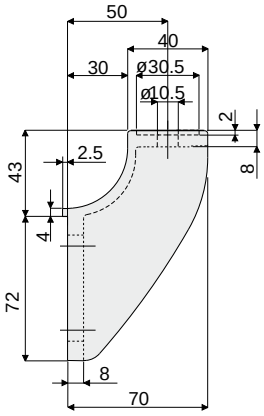

Code
209 / 80754

MATERIALS: Bracket made out of reinforced polyamide black colour.
FEATURES: To be used with heads Part.221, 222, 223 and 266.
BOX QUANTITY: 24 pieces.
ON REQUEST:

- **Brackets:** In reinforced polypropylene, other colours.
- **Box quantity:** According to your request.

Guide rail brackets

Part. 220 Guide rail bracket
(for adjustable heads)

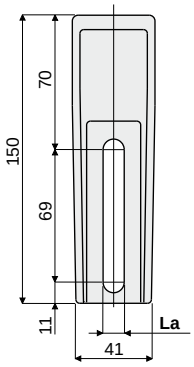

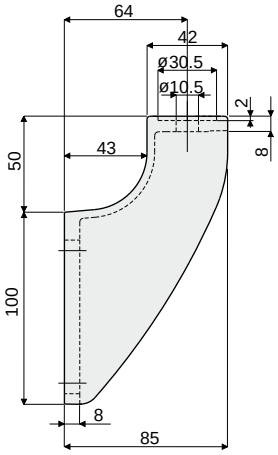

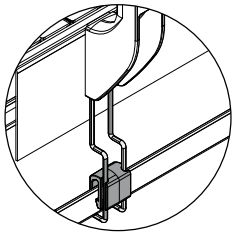

Presetting for
drip tray support
(see on page 26)

La (9 mm slot)	La (11 mm slot)
Code	Code
220 / 82111	220 / 80667

MATERIALS: Bracket made out of reinforced polyamide black colour.
FEATURES: To be used with heads Part.221, 222, 223 and 266.
BOX QUANTITY: 24 pieces.
ON REQUEST:
- Brackets: In reinforced polypropylene, other colours.
- Box quantity: According to your request.

Part. 242 Guide rail bracket
(reinforced type for adjustable head)

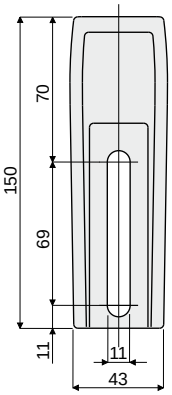

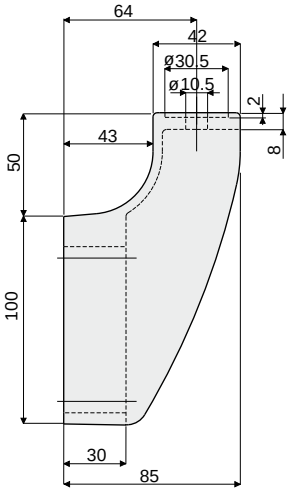

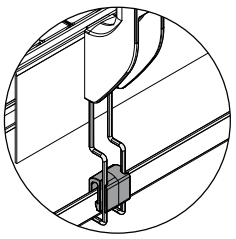

Presetting for
drip tray support
(see on page 26)

Code
242 / 81002

MATERIALS: Bracket made of reinforced polyamide black colour.
FEATURES: To be used with heads Part.221, 222, 223 and 266 for heavy applications.
Suitable in conveyors with more ways, both in accumulation and curve.
BOX QUANTITY: 24 pieces.
ON REQUEST:
- Brackets: In reinforced polypropylene, other colours.
- Box quantity: According to your request.

Guide rail brackets

Spacer for bracket Part. 224

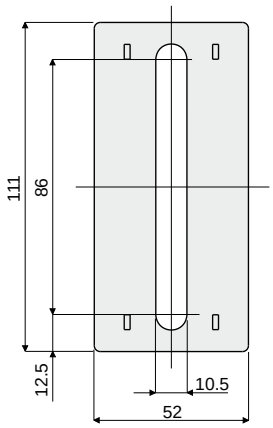

Code
224 / 80676

MATERIALS: Spacer made of reinforced polyamide black colour.
FEATURES: Accessory to be used with brackets Part.215, 218, 219, 220, 242, 243, 244, 255, 280, 281.
BOX QUANTITY: 24 pieces.
ON REQUEST:

- **Spacers:** In reinforced polypropylene, other colours.
- **Box quantity:** According to your request.

Spacer for bracket Part. 225

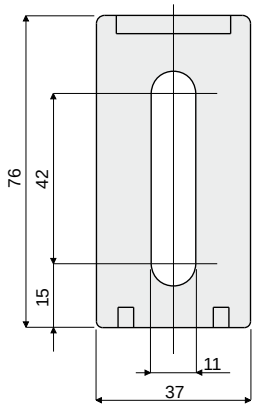

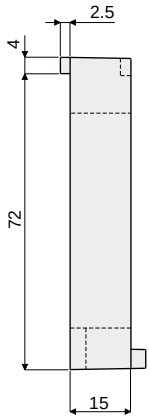

Code
225 / 80677

MATERIALS: Spacer made of reinforced polyamide black colour.
FEATURES: Accessory to be used with brackets Part.213, 214, 216, 217, 209, 279.
BOX QUANTITY: 24 pieces.
ON REQUEST:

- **Spacers:** In reinforced polypropylene, other colours.
- **Box quantity:** According to your request.

Guide rail brackets

Part. 236 Drip tray support

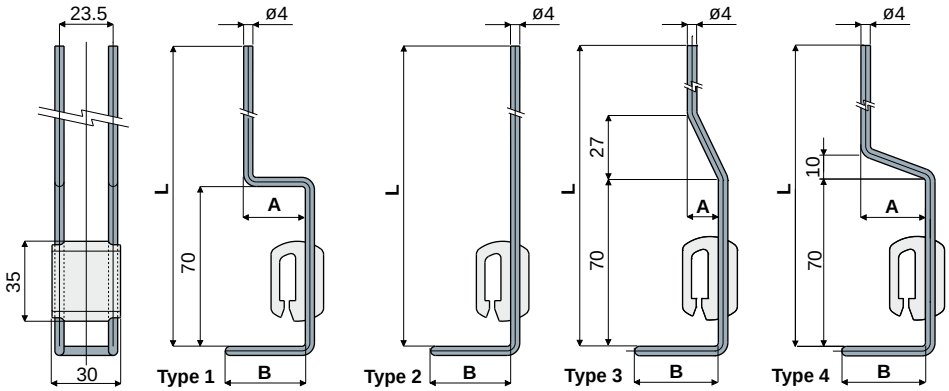

L (mm)	B (mm)	A (mm)	Type 1 Code
180	35	27	**236 / 80779**
180	35	17	**236 / 81012**
230	35	27	**236 / 82683**

L (mm)	B (mm)	Type 2 Code
200	35	**236 / 80780**
246	35	**236 / 81013**

L (mm)	B (mm)	A (mm)	Type 3 Code
250	35	13	**236 / 82640**

L (mm)	B (mm)	A (mm)	Type 4 Code
280	35	27	**236 / 82949**

MATERIALS: Support elements made of stainless steel AISI 304; body of coupling made of reinforced polyamide black colour.
FEATURES: To be used to support drip trays.
BOX QUANTITY: 24 pieces.
ON REQUEST:

- **Drip tray supports:** Supplied in different shapes and sizes.
- **Box quantity:** According to your request.

Part. 235 Mounting plate
(for drip tray support)

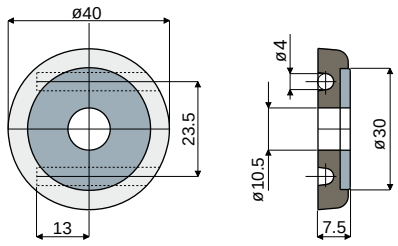

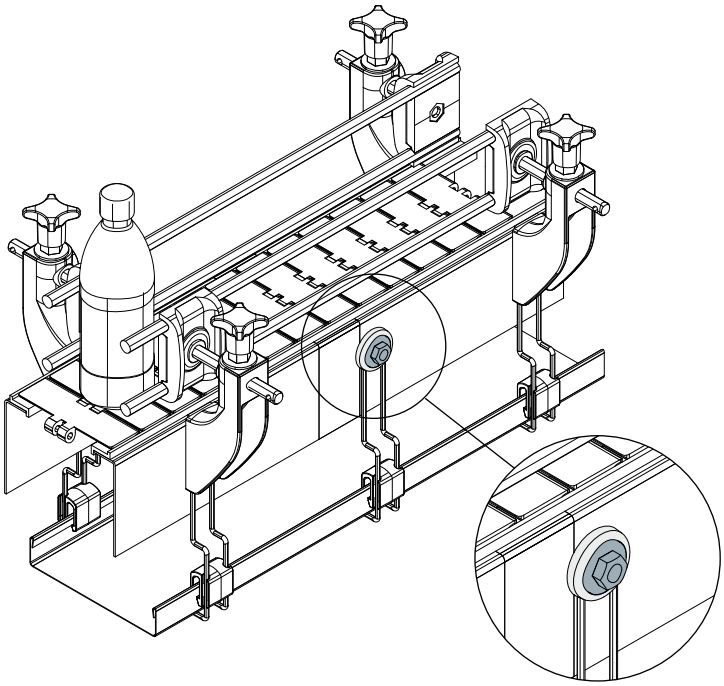

Example of application

Code
235 / 80778

MATERIALS: Plate made of reinforced polyamide black colour; washer made of stainless steel AISI 304.
FEATURES: For application on conveyor side to fasten drip tray support.
BOX QUANTITY: 24 pieces.
ON REQUEST:

- **Box quantity:** According to your request.

Guide rail brackets

Bracket 90° (70 mm x 70 mm) Part. 387

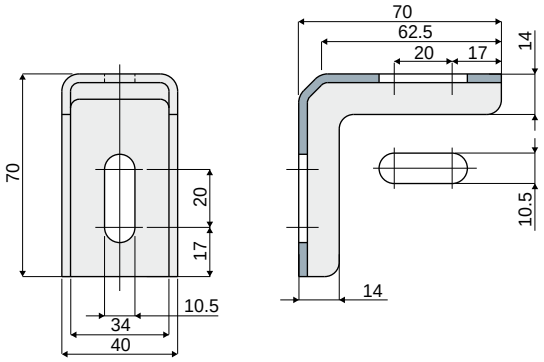

Code
387 / 84128

MATERIALS: Bracket in stainless steel AISI 304.
BOX QUANTITY: 24 pieces.
ON REQUEST:
- **Box quantity:** According to your request.

Bracket 90° (70 mm x 140 mm) Part. 392

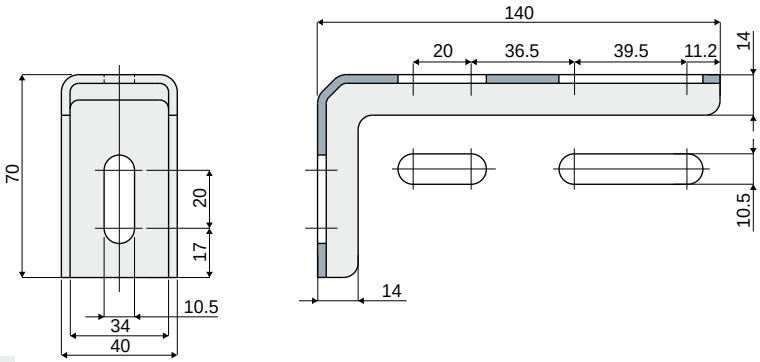

Code
392 / 84130

MATERIALS: Bracket in stainless steel AISI 304.
BOX QUANTITY: 24 pieces.
ON REQUEST:
- **Box quantity:** According to your request.

Bracket 90° (83 mm x 98 mm) Part. 436

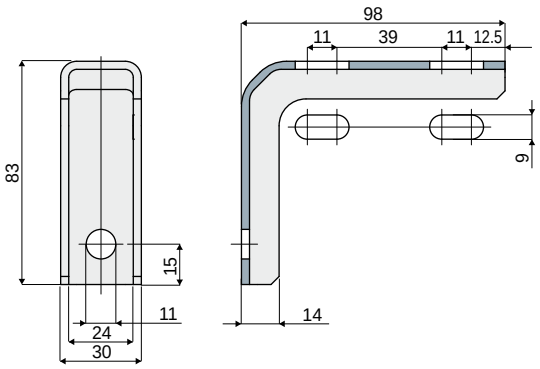

Code
436 / 85215

MATERIALS: Bracket in stainless steel AISI 304.
BOX QUANTITY: 24 pieces.
ON REQUEST:
- **Box quantity:** According to your request.

Guide rail brackets

Part. 408 Guide rail bracket
(compact version)

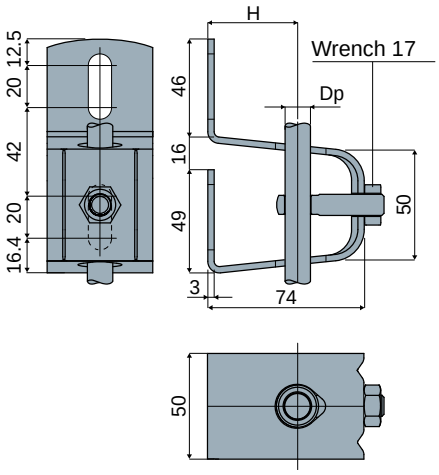

Dp Pin diameter (mm)	H (mm)	Code
12	49	408 / 84337
14	47	408 / 84338
16	46	408 / 84339

MATERIALS: Bracket, eyebolt and nut made of stainless steel AISI 304.
FEATURES: Supplied complete with bolts and nuts.
BOX QUANTITY: 8 pieces.
ON REQUEST:
- Box quantity: According to your request.
- Assembly of: Eyebolts, nuts.

Example of application

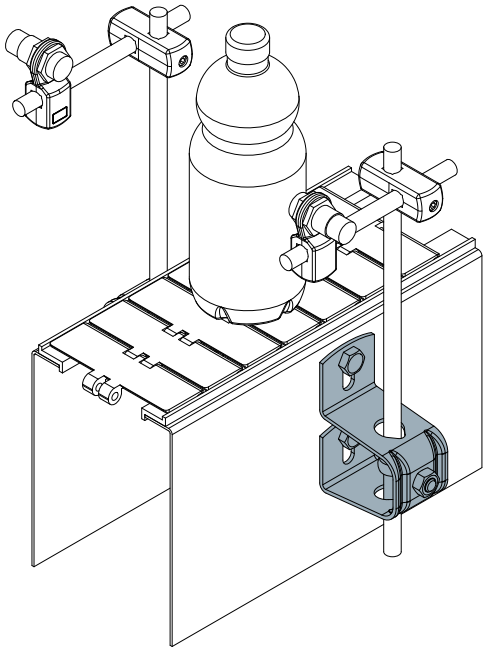

Part. 408 Guide rail bracket
(standard version)

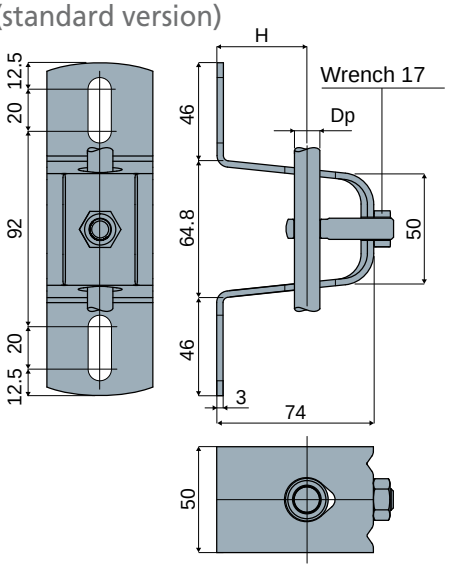

Dp Pin diameter (mm)	H (mm)	Code
12	49	408 / 84334
14	47	408 / 84335
16	46	408 / 84336

MATERIALS: Bracket, eyebolt and nut made of stainless steel AISI 304.
FEATURES: Supplied complete with bolts and nuts.
BOX QUANTITY: 8 pieces.
ON REQUEST:
- Box quantity: According to your request.
- Assembly of: Eyebolts, nuts.

Example of application

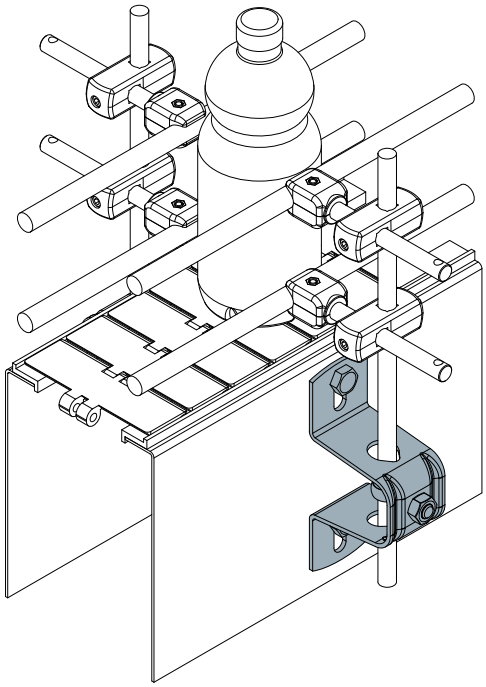

Guide rail brackets

Example of application

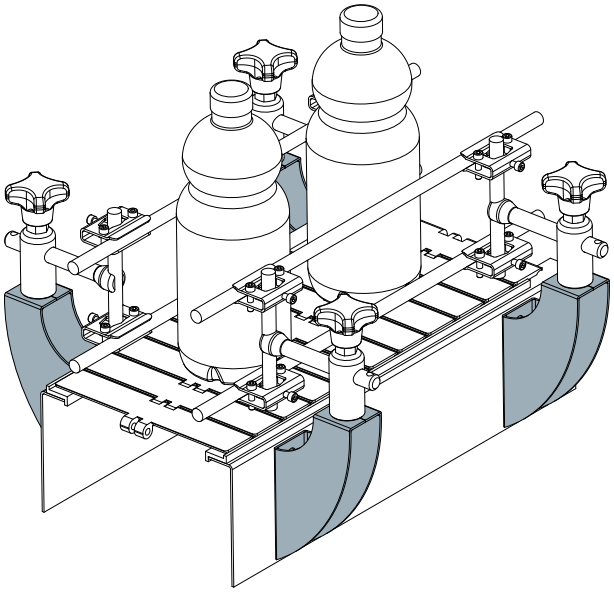

Guide rail bracket Part. 442

NEW

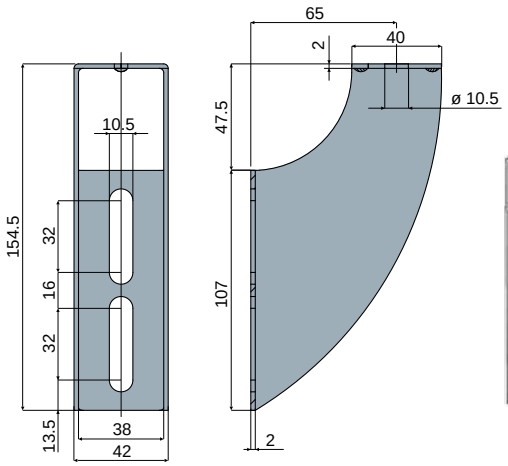

Code
442 / 85242

MATERIALS: Bracket made of stainless steel AISI 304.
BOX QUANTITY: 24 pieces.
ON REQUEST:
- **Box quantity:** According to your request.

Example of application

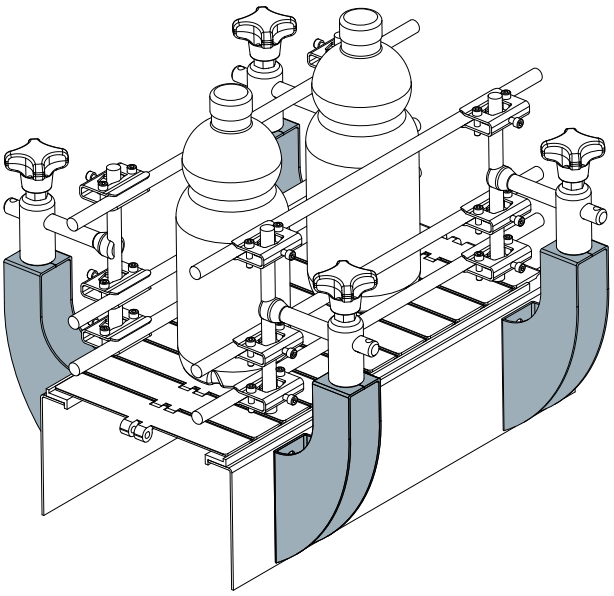

Guide rail bracket Part. 441

NEW

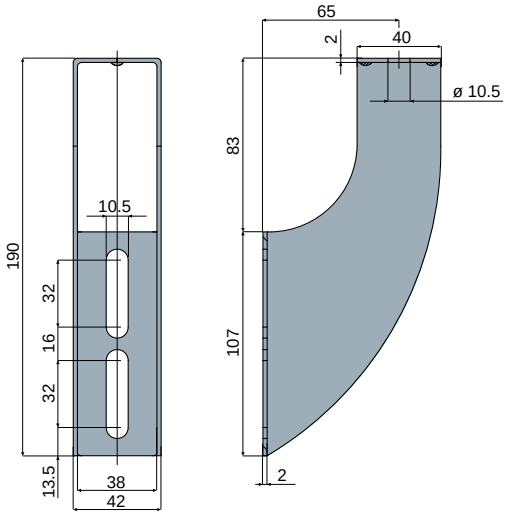

Code
441 / 85241

MATERIALS: Bracket made of stainless steel AISI 304.
BOX QUANTITY: 24 pieces.
ON REQUEST:
- **Box quantity:** According to your request.

Tightening eyebolts

Part. 406 Tightening eyebolt
(with knob)

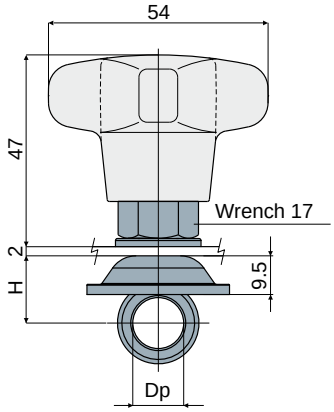

Dp Pin diameter (mm)	H (mm)	Code
12	15.5	406 / 84328
14	16.5	406 / 84329
16	17.5	406 / 84330

MATERIALS: Eyebolt and washers made of stainless steel AISI 304, threaded bushing in nickel plated brass; knob in reinforced polyamide black colour.

FEATURES: Supplied complete with bolts and nuts.

BOX QUANTITY: 24 pieces.

ON REQUEST:

- Assembly of: Eyebolts, washers and nuts.
- Box quantity: According to your request.

Example of application

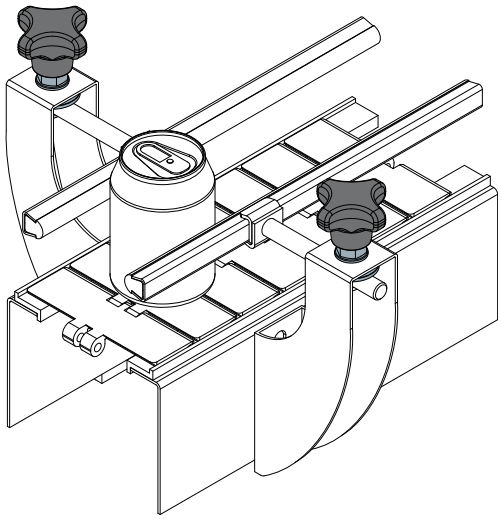

Tightening eyebolts

Example of application

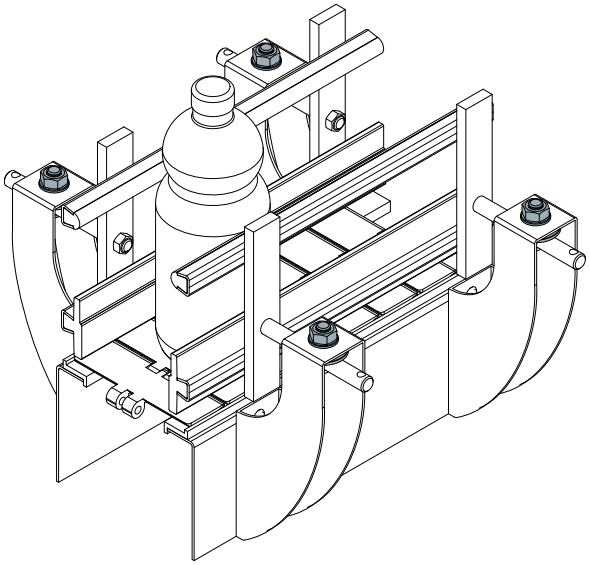

Tightening eyebolt
(with nut)

Part. **407**

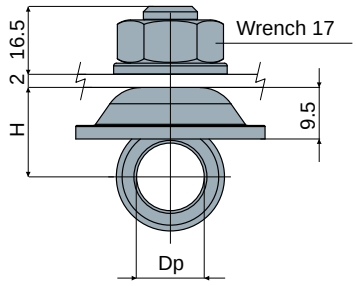

Dp Pin diameter (mm)	H (mm)	Code
12	15.5	407 / 84331
14	16.5	407 / 84332
16	17.5	407 / 84333

MATERIALS: Eyebolt, washers and nuts made of stainless steel AISI 304.
FEATURES: Supplied complete with bolts and nuts.
BOX QUANTITY: 24 pieces.
ON REQUEST:

- Assembly of: Eyebolts, washers and nuts.
- Box quantity: According to your request.

Heads for brackets

Part. 222 Head for bracket

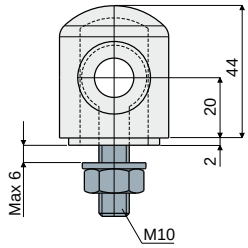

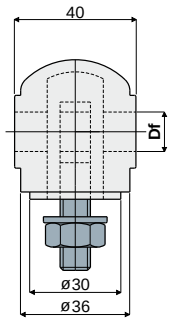

Df Bore for pin of (mm)	Code
12	222 / 80671
14	222 / 80672
16	222 / 80673

MATERIALS: Head made of reinforced polyamide black colour; eyebolt, nut and washer made of stainless steel AISI 304.
FEATURES: To be used with bracket Part.209, 220 and 242.
Max tightening torque 4 Kg·m.
BOX QUANTITY: 24 pieces.
ON REQUEST:
- **Heads:** In reinforced polypropylene, other colours.
- **Box quantity:** According to your request.

Part. 221 Head for bracket

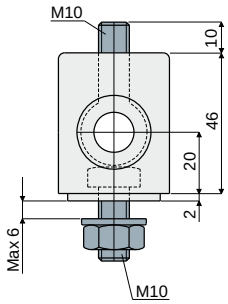

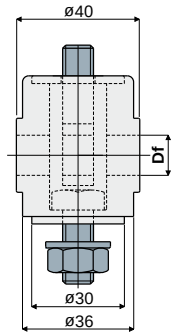

Df Bore for pin of (mm)	Code
12	221 / 80668
14	221 / 80669
16	221 / 80670

MATERIALS: Head made of reinforced polyamide black colour; eyebolt, screw, nut and washers made of stainless steel AISI 304.
FEATURES: To be used with bracket Part.209, 220 and 242.
Max tightening torque 4 Kg·m.
BOX QUANTITY: 24 pieces.
ON REQUEST:
- **Heads:** In reinforced polypropylene, other colours.
- **Box quantity:** According to your request.

Part. 266 Head for bracket (high type)

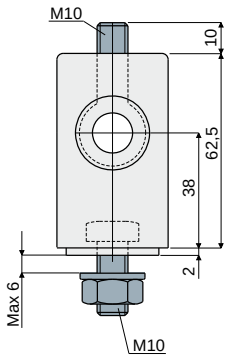

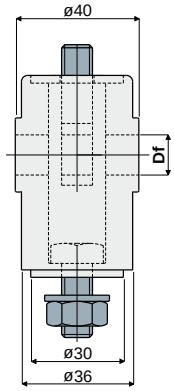

Df Bore for pin of (mm)	Code
12	266 / 82035
14	266 / 82036
16	266 / 82037

MATERIALS: Head made of reinforced polyamide black colour; eyebolt, nuts and washer made of stainless steel AISI 304.
FEATURES: To be used with bracket Part.209, 220 and 242.
Max tightening torque 4 Kg·m.
BOX QUANTITY: 24 pieces.
ON REQUEST:
- **Heads:** Made of reinforced polypropylene, other colours.
- **Box quantity:** According to your request.

Heads for brackets

Head for bracket
(metal)

Part. **223**

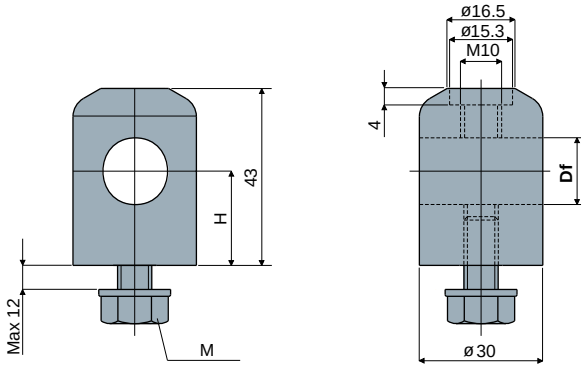

M	Df Bore for pin of (mm)	(inches)	H (mm)	Head made out of nickel plated brass Code	Head made out of stainless steel AISI 304 Code
M8x16	14 - 16	-	22	-	**223 / 84544**
M10x16	14 - 16	-	22	-	**223 / 84226**
M10x20	12,7	1/2"	22	-	**223 / 84543**
	14 - 16	-	22	**223 / 80674**	**223 / 80675**
	14 - 16	-	40	-	**223 / 84542**
	14 - 16	-	60	-	**223 / 83640**

MATERIALS: Head made out of stainless steel AISI 304 or nickel plated brass; screw and washer made out of stainless steel AISI 304.
FEATURES: To be used with Part.209, 220 and 242. Max tightening torque 4 Kg·m.
Possibility to use pins with diameter 12.7, 14, 16 mm and 1/2".
BOX QUANTITY: 24 pieces.
ON REQUEST:
- **Heads:** In different lengths.
- **Box quantity:** According to your request.

Spacer for heads

Part. **256**

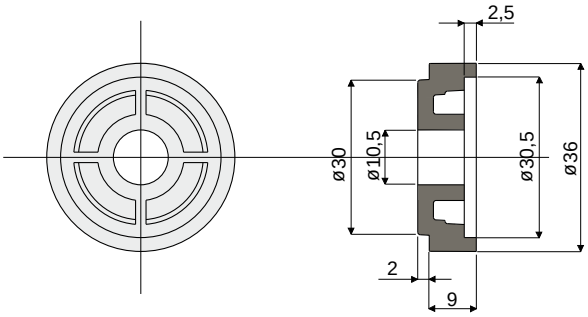

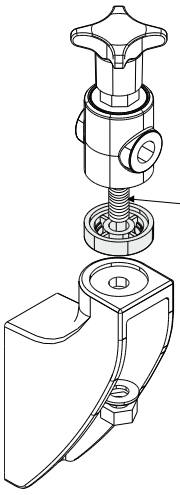

Example of application

N.B.: To use the spacer, it is necessary to change the standard screw with a longer one.

Code
256 / 81011

MATERIALS: Spacer made of reinforced polyamide black colour.
FEATURES: Accessory to be used on brackets Part.214, 215, 216, 217, 219, 255, 209, 220, 242, 218, 243, 244, 279, 280, 281 to increase heads height.
BOX QUANTITY: 24 pieces.
ON REQUEST:
- **Spacers:** In reinforced polypropylene, other colours.
- **Box quantity:** According to your request.

Knobs and handles

Part. 226 Knob for bracket

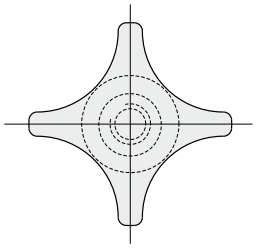

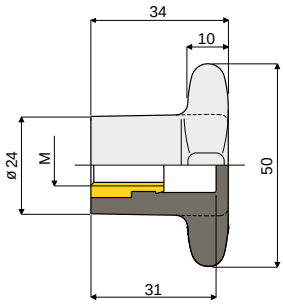

M	Code
M8	226 / 81147
M10	226 / 80678
M12	226 / 81148

MATERIALS: Knob made of reinforced polyamide black colour; threaded bushing made of brass.
FEATURES: Accessory to be used with heads Part.221 and 266.
BOX QUANTITY: 24 pieces.
ON REQUEST:
- Knobs: In reinforced polypropylene, other colours.
- Box quantity: According to your request.

Part. 227 Knob for bracket

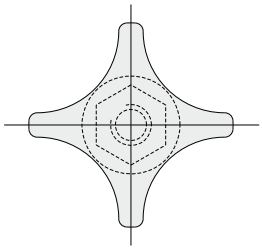

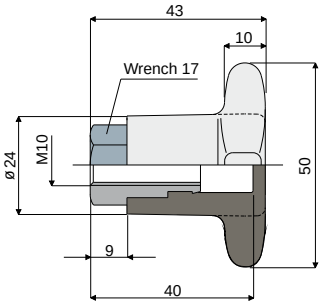

Code
227 / 80679

MATERIALS: Knob made of reinforced polyamide black colour; threaded bushing made of brass.
FEATURES: Accessory to be used with heads Part.221 and 266.
BOX QUANTITY: 24 pieces.
ON REQUEST:
- Knobs: In reinforced polypropylene, other colours.
- Box quantity: According to your request.

Part. 228 Knob for bracket

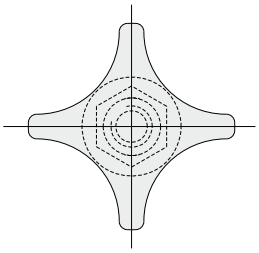

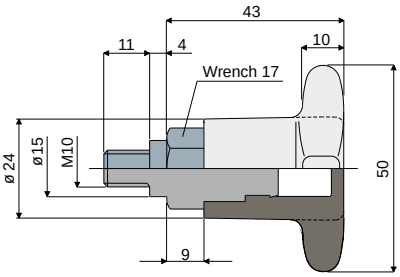

Code
228 / 80680

MATERIALS: Knob made of reinforced polyamide black colour; threaded bushing made of brass.
FEATURES: Accessory to be used with head Part.223.
BOX QUANTITY: 24 pieces.
ON REQUEST:
- Knobs: In reinforced polypropylene, other colours.
- Box quantity: According to your request.

Part. 246 Knob for bracket (reinforced type)

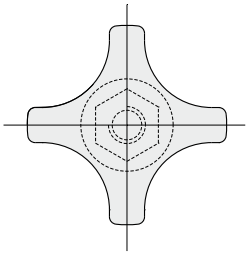

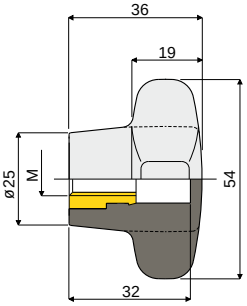

M	Code
M8	246 / 84473
M10	246 / 81135
M12	246 / 84870

MATERIALS: Knob made of reinforced polyamide black colour; threaded bushing is made of brass.
FEATURES: Accessory to be applied to our heads Part.221 and Part.266.
BOX QUANTITY: 24 pieces.
ON REQUEST:
- Knobs: In reinforced polypropylene, other colours.
- Box quantity: According to your request.

Knobs and handles

Knob for bracket (reinforced type) Part. 247

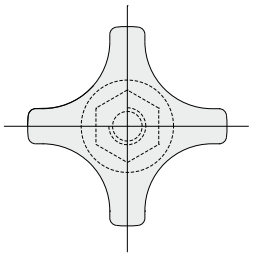

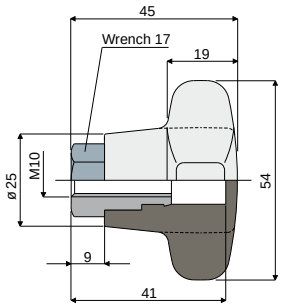

Code
247 / 81137

MATERIALS: Knob made of reinforced polyamide black colour; threaded bushing made of nickel plated brass.
FEATURES: Accessory to be applied to our heads Part.221 and Part.266.
BOX QUANTITY: 24 pieces.
ON REQUEST:
- Knobs: In reinforced polypropylene, other colours.
- Box quantity: According to your request.

Knob for bracket (reinforced type) Part. 248

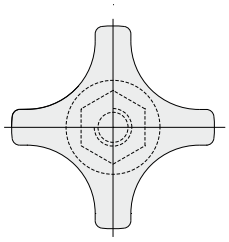

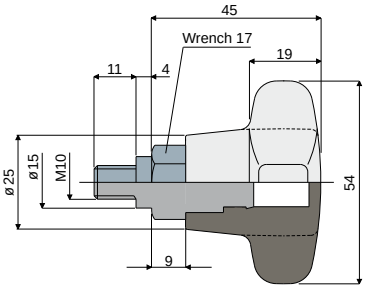

Code
248 / 81139

MATERIALS: Knob made of reinforced polyamide black colour; threaded insert made of nickel plated brass.
FEATURES: Accessory to be applied to our head Part.223.
BOX QUANTITY: 24 pieces.
ON REQUEST:
- Knobs: In reinforced polypropylene, other colours.
- Box quantity: According to your request.

Knob for bracket (short type) Part. 313

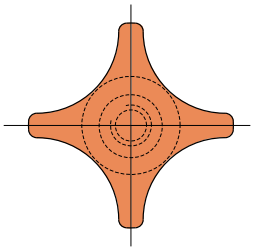

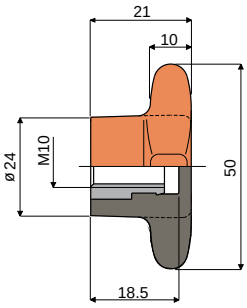

Code
313 / 82848

MATERIALS: Knob made of reinforced polyamide orange colour; threaded bushing made of nickel plated brass.
FEATURES: Accessory to be used with heads Part.221 and 266.
BOX QUANTITY: 24 pieces.
ON REQUEST:
- Knobs: In reinforced polypropylene, other colours.
- Box quantity: According to your request.

Knob for bracket (short type) Part. 314

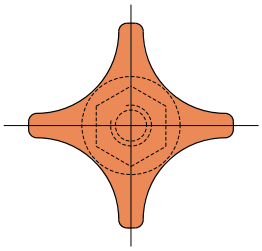

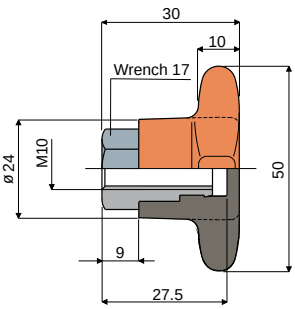

Code
314 / 82849

MATERIALS: Knob made of reinforced polyamide orange colour; threaded bushing made of nickel plated brass.
FEATURES: Accessory to be used with heads Part.221 and 266.
BOX QUANTITY: 24 pieces.
ON REQUEST:
- Knobs: In reinforced polypropylene, other colours.
- Box quantity: According to your request.

Knobs and handles

Part. 315 Knob for bracket
(short type)

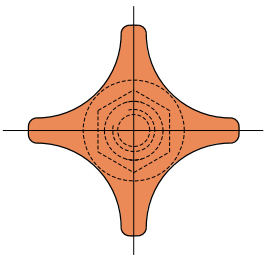

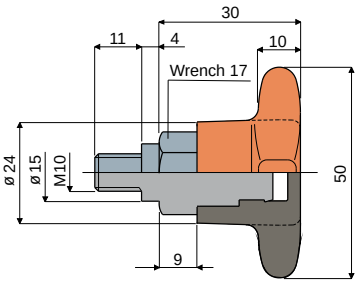

Code
315 / 82850

MATERIALS: Knob made of reinforced polyamide orange colour; threaded bushing made of nickel plated brass.
FEATURES: Accessory to be used with head Part.223.
BOX QUANTITY: 24 pieces.
ON REQUEST:
- Knobs: In reinforced polypropylene, other colours.
- Box quantity: According to your request.

Part. 334 Round handle
(ø 44 mm)

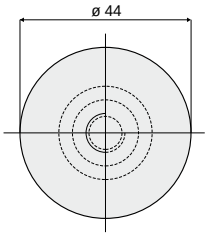

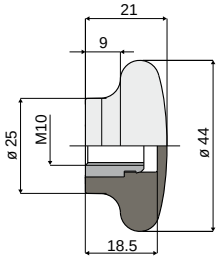

Code
334 / 83116

MATERIALS: Handle made of reinforced polyamide black colour; threaded bushing made of nickel plated brass.
FEATURES: Accessory to be used with heads Part.221 and 266.
BOX QUANTITY: 24 pieces.
ON REQUEST:
- Handles: In reinforced polypropylene, other colours.
- Box quantity: According to your request.

Part. 337 Round handle
(ø 44 mm)

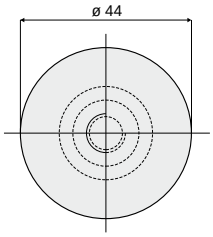

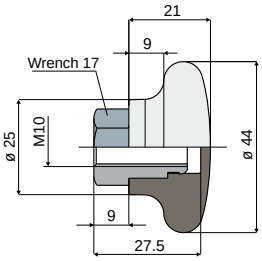

Code
337 / 83302

MATERIALS: Handle made of reinforced polyamide black colour; threaded bushing made of nickel plated brass.
FEATURES: Accessory to be used with heads Part.221 and 266.
BOX QUANTITY: 24 pieces.
ON REQUEST:
- Handles: In reinforced polypropylene, other colours.
- Box quantity: According to your request.

Part. 338 Round handle
(ø 44 mm)

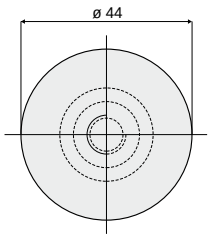

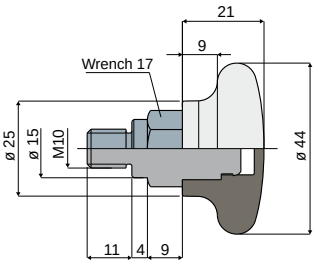

Code
338 / 83303

MATERIALS: Handle made of reinforced polyamide black colour; threaded bushing made of nickel plated brass.
FEATURES: Accessory to be used with head Part.223.
BOX QUANTITY: 24 pieces.
ON REQUEST:
- Handles: In reinforced polypropylene, other colours.
- Box quantity: According to your request.

Knobs and handles

Ball handle Part. 382

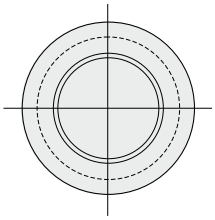

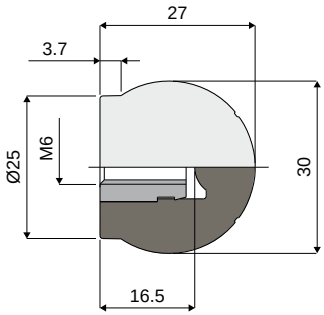

Code
382 / 84119

MATERIALS: Ball handle made of reinforced polyamide, black colour; threaded bushing in nickel plated brass.
BOX QUANTITY: 24 pieces.
ON REQUEST:
- **Handles:** Made in reinforced polypropylene, different colours.
- **Box quantity:** According to your request.

Round handle (ø 44 mm) Part. 386

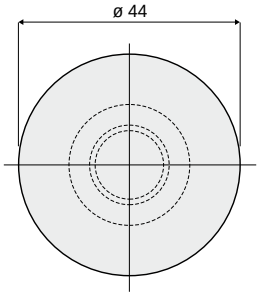

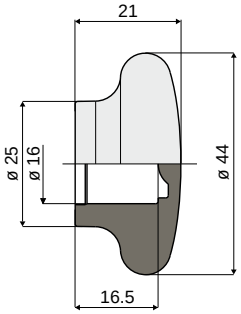

Code
386 / 84124

MATERIALS: Handle in reinforced polypropylene, orange colour.
FEATURES: To be used as protection for the pins edges.
BOX QUANTITY: 24 pieces.
ON REQUEST:
- **Handles:** in reinforced polypropylene, different colours.
- **Box quantity:** according to your request.

Knob for bracket (reinforced type) Part. 294

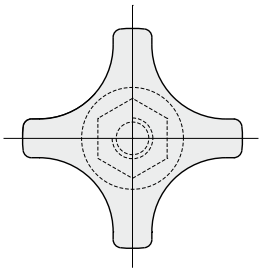

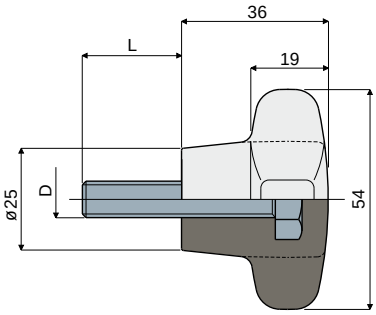

D (mm)	L (mm)	Code
M8	22	294 / 82805
M10	22	294 / 82588

MATERIALS: Knob made of reinforced polyamide black colour; bolt made of stainless steel AISI 304.
BOX QUANTITY: 24 pieces.
ON REQUEST:
- **Knobs:** Made of reinforced polypropylene, in other colours, with bolts of different length and diameter.
- **Box quantity:** According to your request.

Knobs and handles

Part. 383 Knob

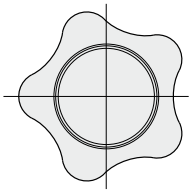

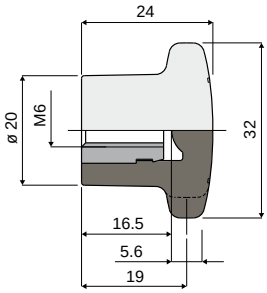

Code
383 / 84120

MATERIALS: Knob made of reinforced polyamide, black colour; threaded bushing in nickel plated brass.
BOX QUANTITY: 24 pieces.
ON REQUEST:
- Knobs: In reinforced polypropylene, other colours, with customized brand.
- Box quantity: According to your request.

Part. 350 Knob

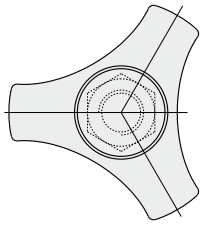

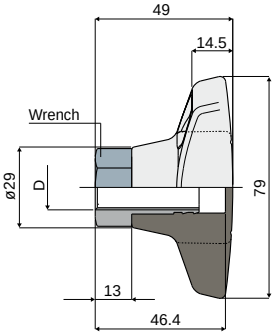

D	Wrench	Code
M12	19	350 / 83398
M16	24	350 / 83399

MATERIALS: Knob made of reinforced polyamide black colour; threaded bushing in nickel plated brass.
BOX QUANTITY: 24 pieces.
ON REQUEST:
- Knobs: In reinforced polypropylene, other colours, with customized brand.
- Box quantity: According to your request.

Knobs and handles

"T"- handle Part. 303

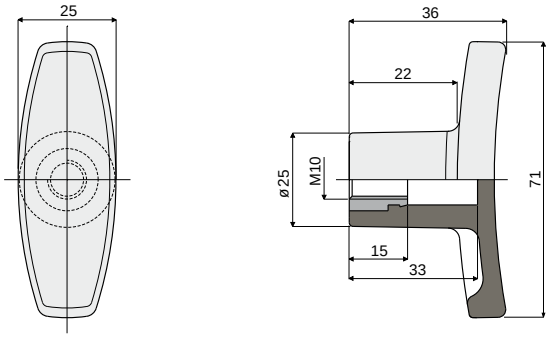

Code
303 / 82806

MATERIALS: Handle is made of reinforced polyamide black colour; threaded bushing is made of nickel plated brass.
BOX QUANTITY: 24 pieces.
ON REQUEST:
- **Handles:** made of reinforced polypropylene, other colours.
- **Box quantity:** According to your request.

"T"- handle Part. 304

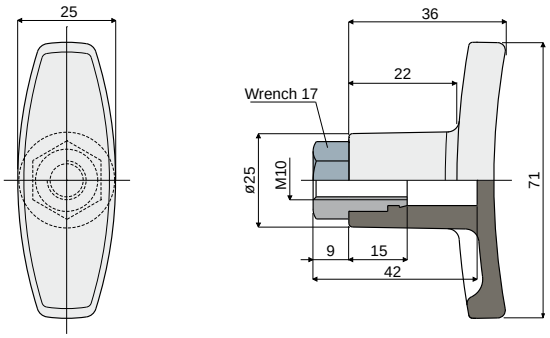

Code
304 / 82807

MATERIALS: Handle is made of reinforced polyamide black colour; threaded bushing is made of nickel plated brass.
BOX QUANTITY: 24 pieces.
ON REQUEST:
- **Handles:** made of reinforced polypropylene, other colours.
- **Box quantity:** According to your request.

"T"- handle Part. 305

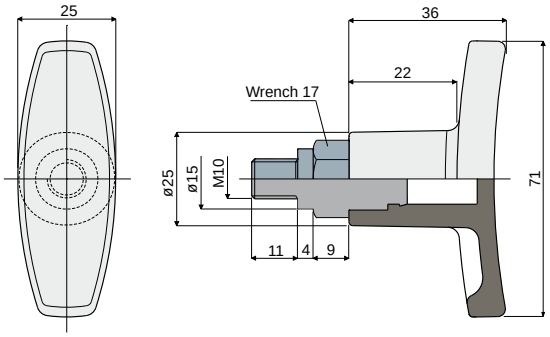

Code
305 / 82808

MATERIALS: Handle is made of reinforced polyamide black colour; threaded bushing is made of nickel plated brass.
BOX QUANTITY: 24 pieces.
ON REQUEST:
- **Handles:** made of reinforced polypropylene, other colours.
- **Box quantity:** According to your request.

Knobs and handles

Part. 397 Ratchet handle clamping

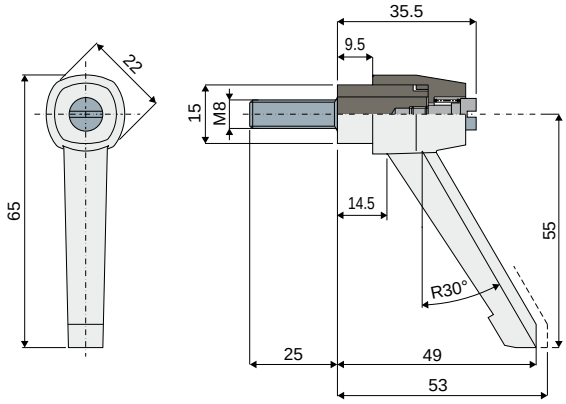

Code
397 / 84260

MATERIALS: Handle made of reinforced polyamide black colour; threaded insert made of stainless steel AISI 304.
BOX QUANTITY: 24 pieces.
ON REQUEST:
- Box quantity: According to your request.

Part. 400 Ratchet handle clamping

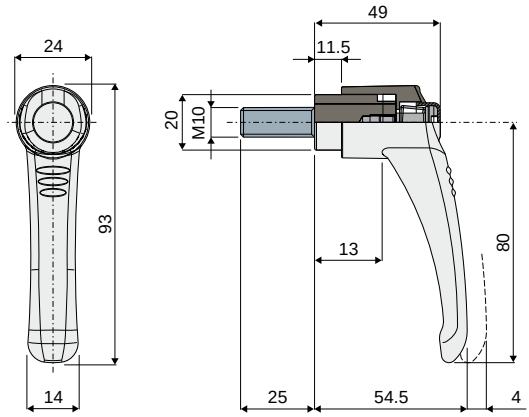

Code
400 / 84316

MATERIALS: Handle made of reinforced polyamide black colour with push botton in orange colour; threaded insert made of stainless steel AISI 304.
BOX QUANTITY: 24 pieces
ON REQUEST:
- Box quantity: According to your request.

Part. 332 Ratchet handle clamping

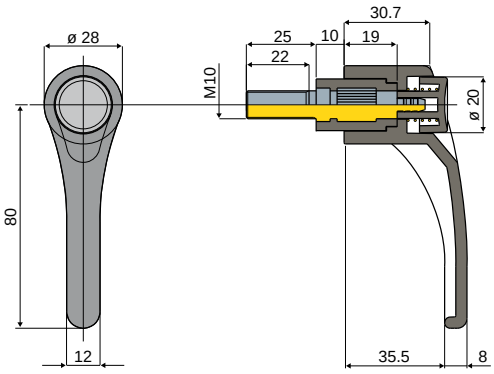

Code
332 / 83113

MATERIALS: Handle made of reinforced polyamide black colour with push button in orange colour; threaded insert made of zinc plated steel.
BOX QUANTITY: 24 pieces.
ON REQUEST:
- Handles: With threaded inserts M8, M10, M12, with different lengths; also available in stainless steel AISI 304.
- Box quantity: According to your request.

Guide rail clamps

Guide rail clamp
(for trapezoidal rails)

Part. **230**

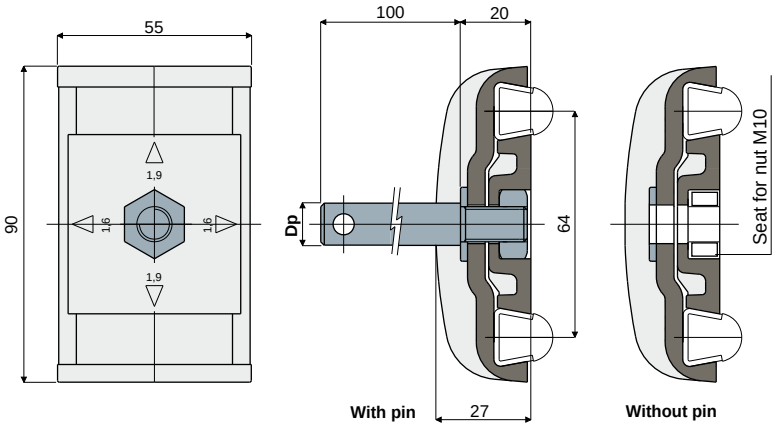

Rail for this type of clamp

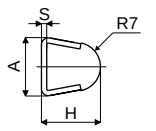

S (mm)	H (mm)	A (mm)
1.5	17.5	16
2	18	17

Dp Pin diameter (mm)	With pin Code	Without pin Code
12	230 / 80684	
14	230 / 80685	230 / 80611
16	230 / 80686	

MATERIALS: Clamp made of reinforced polyamide black colour; pin, nut and washer made of stainless steel AISI 304.
FEATURES: Supplied with or without support pin. With this item it is possible to use thickness 1,5 and 2 mm guides, by rotating for 90° the central plate: Part.354, 377, 419, 418, 420, 353.
BOX QUANTITY: 24 pieces.
ON REQUEST:
- **Clamps:** In reinforced polypropylene, other colours.
- **Box quantity:** According to your request.

Guide rail clamp
(for rectangular rails)

Part. **289**

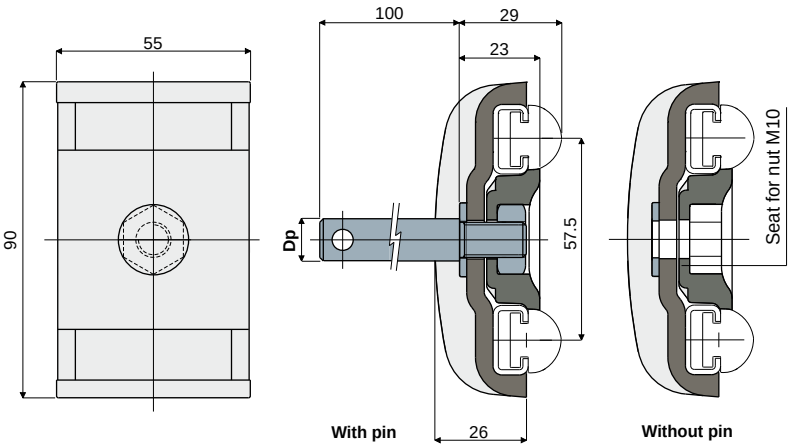

Rail for this type of clamp

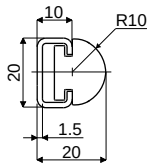

Dp Pin diameter (mm)	With pin Code	Without pin Code
12	289 / 82569	
14	289 / 82570	289 / 82572
16	289 / 82571	

MATERIALS: Clamp made of reinforced polyamide black colour; pin, nut and washer made of stainless steel AISI 304.
FEATURES: Supplied with or without support pin. To be used for the support of the product guide rail Part.373.
BOX QUANTITY: 24 pieces.
ON REQUEST:
- **Clamps:** In reinforced polypropylene, other colours.
- **Box quantity:** According to your request.

Guide rail clamps

Part. 229 Guide rail clamp
(for round rails)

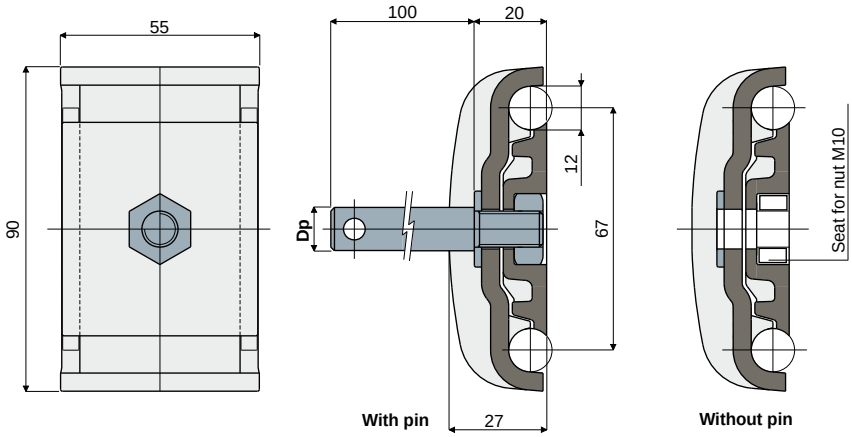

Dp Pin diameter (mm)	With pin Code	Without pin Code
12	229 / 80681	
14	229 / 80682	229 / 80609
16	229 / 80683	

MATERIALS: Clamp made of reinforced polyamide black colour; pin, nut and washer made of stainless steel AISI 304.
FEATURES: Supplied with or without support pin.
BOX QUANTITY: 24 pieces.
ON REQUEST:
- Clamps: In reinforced polypropylene, other colours.
- Box quantity: According to your request.

Part. 231 Guide rail clamp
(for round rails)

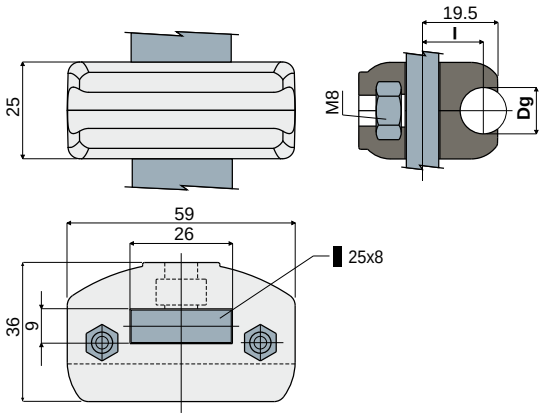

Example of application

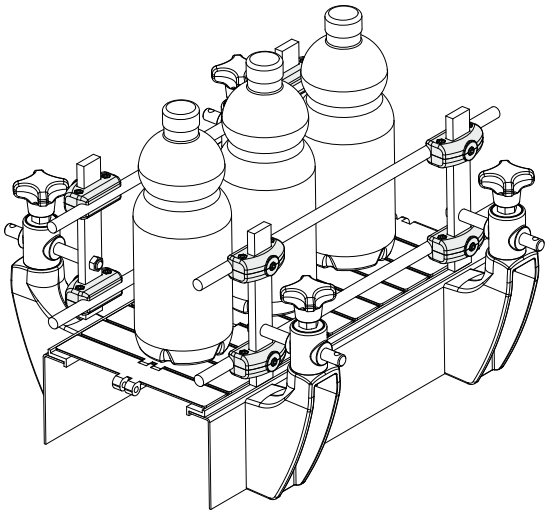

Dg Rail diameter (mm)	l (mm)	Code
8	16	231 / 80749
10	15	231 / 80788
12	15	231 / 80687
14	15	231 / 80787

MATERIALS: Clamp made of reinforced polyamide black colour; bolts and nuts made of stainless steel AISI 304.
FEATURES: Supplied assembled. To be used with flat support with sizes 25x8 mm.
BOX QUANTITY: 24 pieces.
ON REQUEST:
- Clamps: In reinforced polypropylene, other colours.
- Box quantity: According to your request.

Guide rail clamps

Guide rail clamp
(for trapezoidal rails)

Part. **232**

Example of application

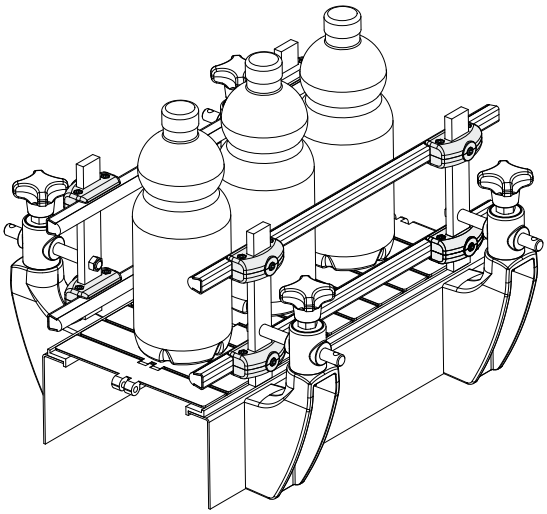

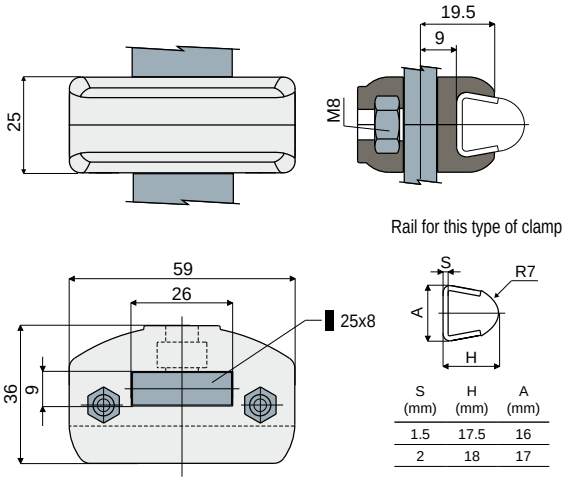

Code
232 / 80688

MATERIALS: Clamp made of reinforced polyamide black colour; bolts and nuts made of stainless steel AISI 304.
FEATURES: Supplied assembled. To be used with flat support with sizes 25x8 mm.
With this item it is possible to use thickness 1,5 and 2 mm guides: Part.354, 377, 419, 418, 420, 353.
BOX QUANTITY: 24 pieces.
ON REQUEST:
- Clamps: In reinforced polypropylene, other colours.
- Box quantity: According to your request.

Guide rail clamp
(for rectangular rails)

Part. **291**

Example of application

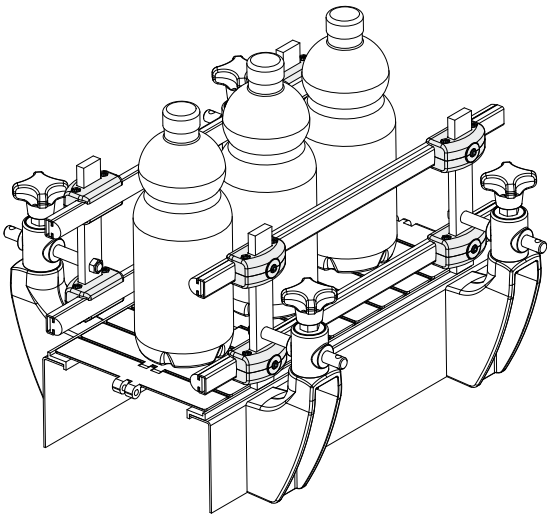

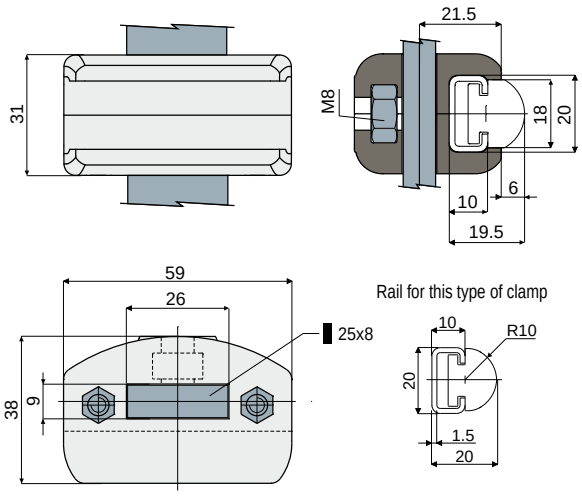

Code
291 / 82578

MATERIALS: Clamp made of reinforced polyamide black colour; bolts and nuts made of stainless steel AISI 304.
FEATURES: Supplied assembled. To be used with flat profile with sizes 25x8 mm.
To be used for the support of the product guide rail Part.373.
BOX QUANTITY: 24 pieces.
ON REQUEST:
- Clamps: In reinforced polypropylene, other colours.
- Box quantity: According to your request.

Guide rail clamps

Part. 346 Guide rail clamp
(for round rails)

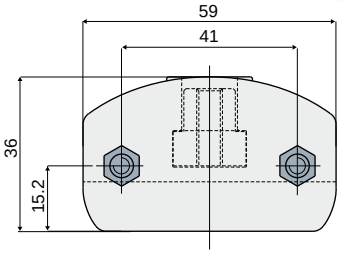

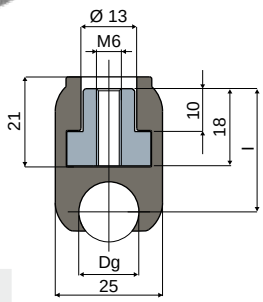

Dg Rail diameter (mm)	l (mm)	Code
8	30	346 / 83390
10	29.5	346 / 83391
12	29.5	346 / 83392
14	28.7	346 / 83393

MATERIALS: Clamp made of reinforced polyamide black colour; threaded insert in nickel plated brass; bolts and nuts in stainless steel AISI 304.

FEATURES: Designed appositely to be assembled directly on the pneumatic cylinder for the rails regulation. Supplied assembled.

BOX QUANTITY: 24 pieces.

ON REQUEST:

- Clamps: In reinforced polypropylene, other colours.
- Box quantity: According to your request.

Example of application

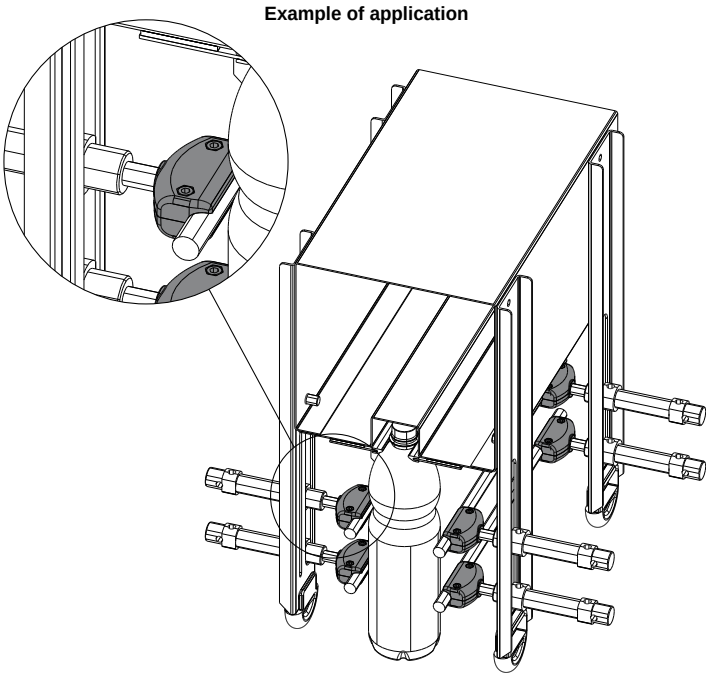

Part. 347 Guide rail clamp
(for trapezoidal rails)

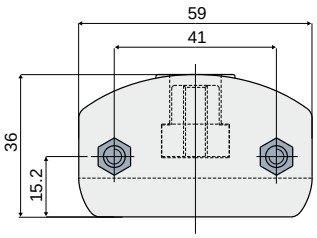

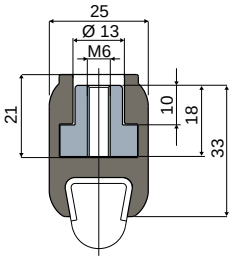

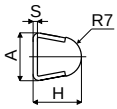

S (mm)	H (mm)	A (mm)
1.5	17.5	16
2	18	17

Code
347 / 83394

MATERIALS: Clamp made of reinforced polyamide black colour; threaded insert in nickel plated brass; bolts and nuts in stainless steel AISI 304.

FEATURES: Designed appositely to be assembled directly on the pneumatic cylinder for the rails regulation. With this item it is possible to use thickness 1,5 and 2 mm guides: Part.354, 377, 419, 418, 420, 353. Supplied assembled.

BOX QUANTITY: 24 pieces.

ON REQUEST:

- Clamps: In reinforced polypropylene, other colours.
- Box quantity: According to your request.

Example of application

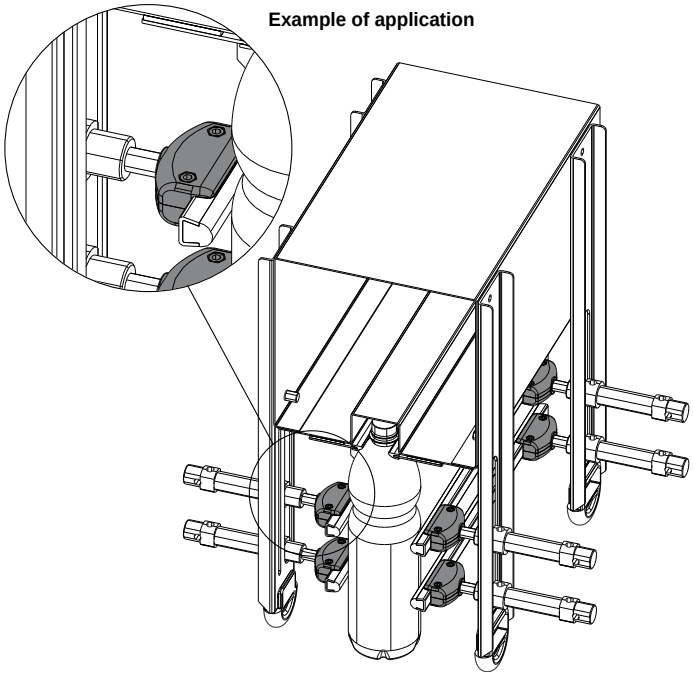

Guide rail clamps

Example of application

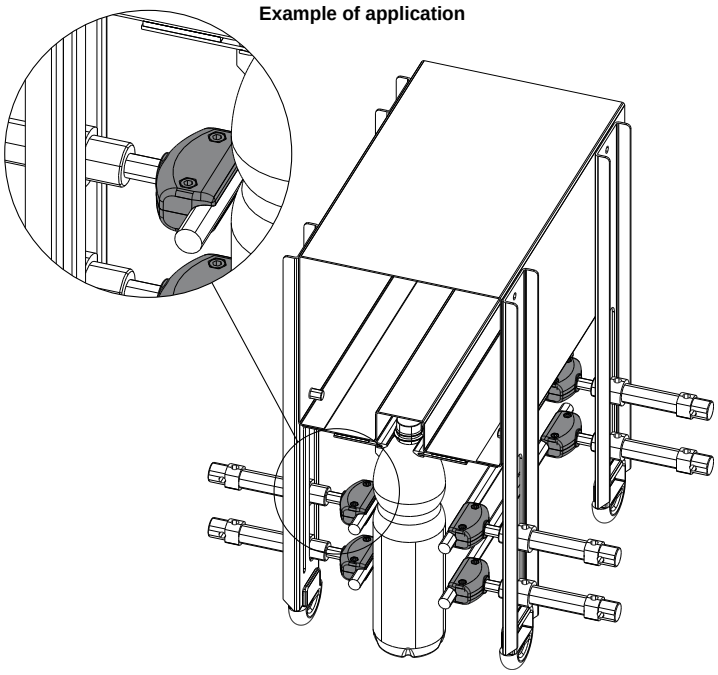

Guide rail clamp
(for round rails)

Part. **348**

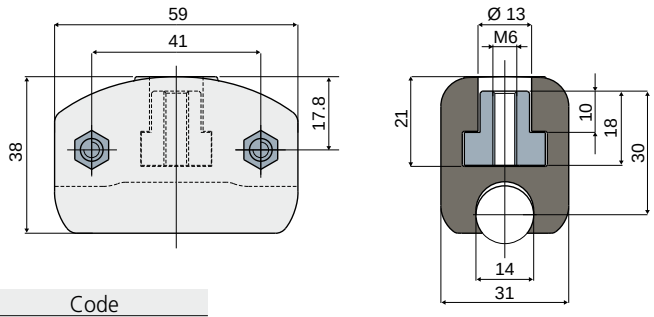

Code
348 / 83395

MATERIALS: Clamp made of reinforced polyamide black colour; threaded insert in nickel plated brass; bolts and nuts in stainless steel AISI 304.

FEATURES: Designed appositely to be assembled directly on the pneumatic cylinder for the rails regulation. Supplied assembled.

BOX QUANTITY: 24 pieces.

ON REQUEST:

- **Clamps:** In reinforced polypropylene, other colours.
- **Box quantity:** According to your request.

Example of application

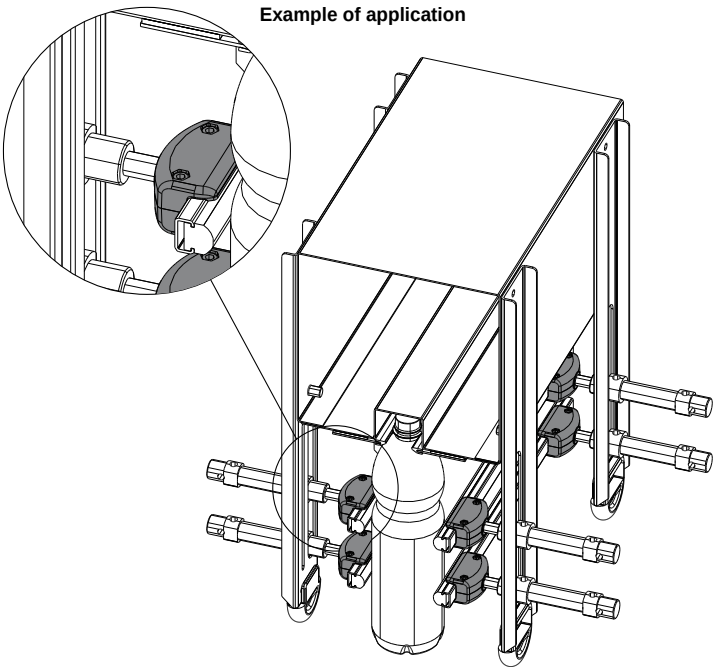

Guide rail clamp
(for rectangular rails)

Part. **349**

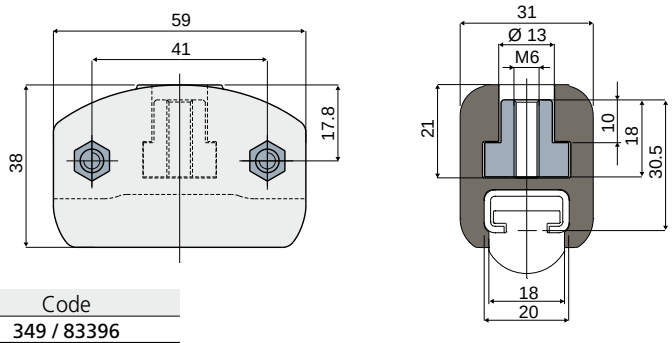

Code
349 / 83396

MATERIALS: Clamp made of reinforced polyamide black colour; threaded insert in nickel plated brass; bolts and nuts in stainless steel AISI 304.

FEATURES: Designed appositely to be assembled directly on the pneumatic cylinder for the rails regulation. To be used for the support of the product guide rail Part.373. Supplied assembled.

BOX QUANTITY: 24 pieces.

ON REQUEST:

- **Clamps:** In reinforced polypropylene, other colours.
- **Box quantity:** According to your request.

Guide rail clamps

Part. 290 Guide rail clamp
(for rectangular rail)

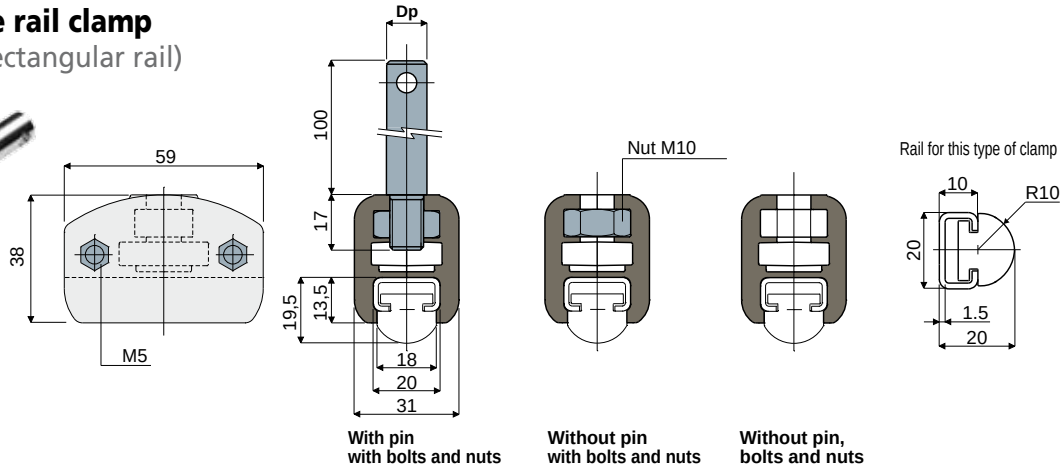

Dp Pin diameter (mm)	With pin with bolts and nuts	Without pin with bolts and nuts	Without pin, bolts and nuts
	Code	Code	Code
12	290 / 82573		
14	290 / 82574	290 / 82576	290 / 82577
16	290 / 82575		

MATERIALS: Clamp made of reinforced polyamide black colour; pin, bolts and nuts made of stainless steel AISI 304.
FEATURES: Supplied with or without support pin. To be used for the support of the product guide rail Part.373.
BOX QUANTITY: 24 pieces.
ON REQUEST:
- **Clamps:** In reinforced polypropylene, other colours.
- **Box quantity:** According to your request.

Part. 301 Threaded pin

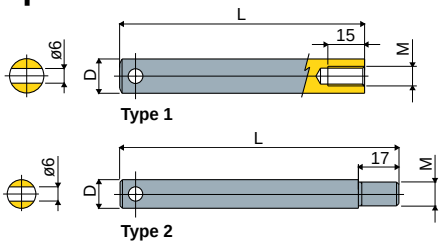

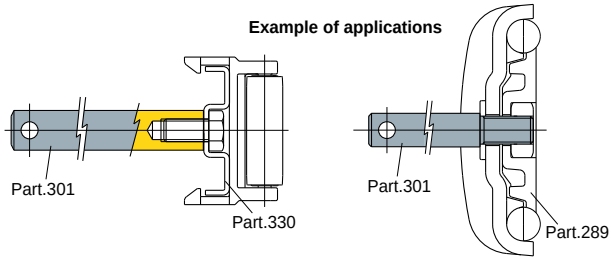

D (mm)	L (mm)	M (mm)	Type 1 Code
14	100	M8	301 / 82751

D (mm)	L (mm)	M (mm)	Type 2 Code
12	117	M10	301 / 83304
12	150	M8	301 / 85381 NEW
12	217	M10	301 / 83871
14	117	M10	301 / 83305
16	117	M10	301 / 83306
16	121	M10	301 / 84109

MATERIALS: Pin made of stainless steel AISI 304.
FEATURES:
- **Type 1:** Can be mounted both on guide rail clamps or on side guides;
- **Type 2:** Used for the mounting of Part. 289, 229, 230, 290, 204, 205.

BOX QUANTITY: 24 pieces.
ON REQUEST:
- **Pins:** In various lengths.
- **Box quantity:** According to your request.

Part. 460 Threaded pin for guide rail clamp

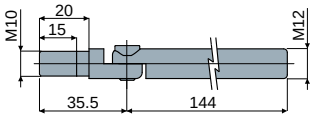

Example of application

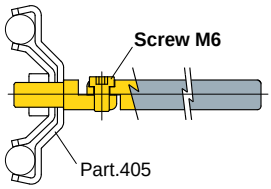

Example of application

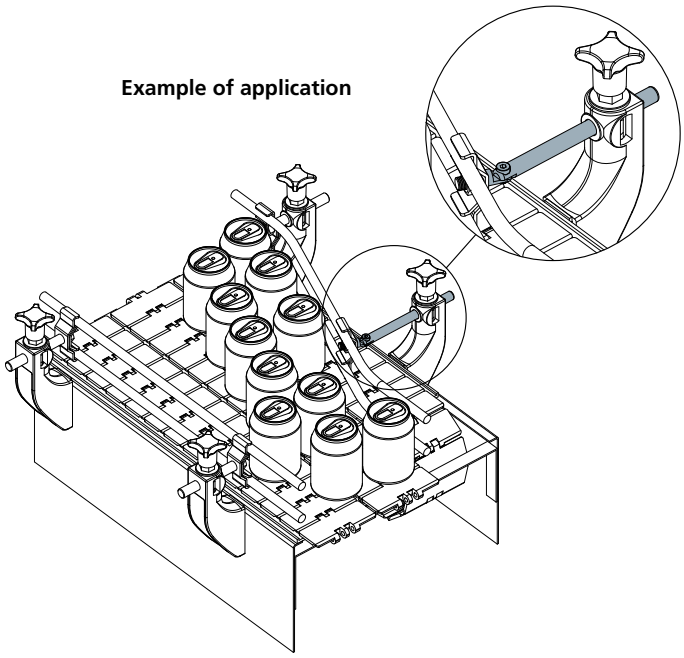

Code
460 / 85470

MATERIALS: Pin made of stainless steel AISI 304.
FEATURES: Supplied complete with bolts and nuts.
BOX QUANTITY: 24 pieces.
ON REQUEST:
- **Pins:** In various lengths.
- **Box quantity:** According to your request.

Guide rail clamps

Cap for pins

Part. **398**

Dp (mm)	H (mm)	L (mm)	Code
12	17	21	398 / 84258
14	18	23	398 / 84259

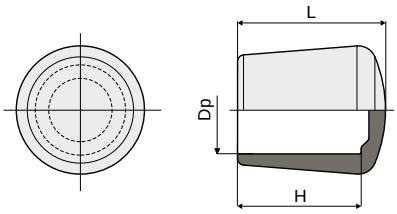

NEW

MATERIALS: Cap made of thermoplastic rubber.
FEATURES: To be applied at the ends of the pins.
BOX QUANTITY: 24 pieces.
ON REQUEST:
- **Box quantity:** According to your request.

Guide rail clamp (for round rails)

Part. **204**

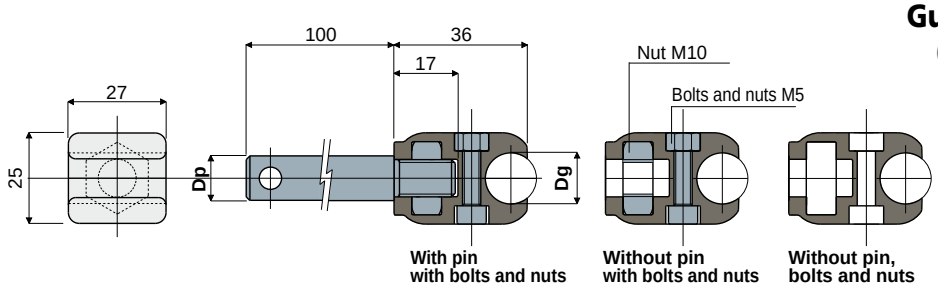

Dp Pin diameter (mm)	Dg Rail diameter (mm)	With pin with bolts and nuts Code
12	8	204 / 80798
	10	204 / 80799
	12	204 / 80800
	14	204 / 80801
14	8	204 / 80802
	10	204 / 80803
	12	204 / 80804
	14	204 / 80805
16	8	204 / 80806
	10	204 / 80807
	12	204 / 80808
	14	204 / 80809

Dg Rail diameter (mm)	Without pin with bolts and nuts Code
8	204 / 80810
10	204 / 80811
12	204 / 80812
14	204 / 80813

Dg Rail diameter (mm)	Without pin, bolts and nuts Code
8	204 / 80978
10	204 / 80979
12	204 / 80980
14	204 / 80981

MATERIALS: Clamp made of reinforced polyamide black colour; pin, bolts and nuts made of stainless steel AISI 304.
FEATURES: Supplied with or without support pin and with or without bolts and nuts.
BOX QUANTITY: 24 pieces.
ON REQUEST:
- **Clamps:** In reinforced polypropylene, other colours.
- **Box quantity:** According to your request.

Guide rail clamp (for trapezoidal rails)

Part. **205**

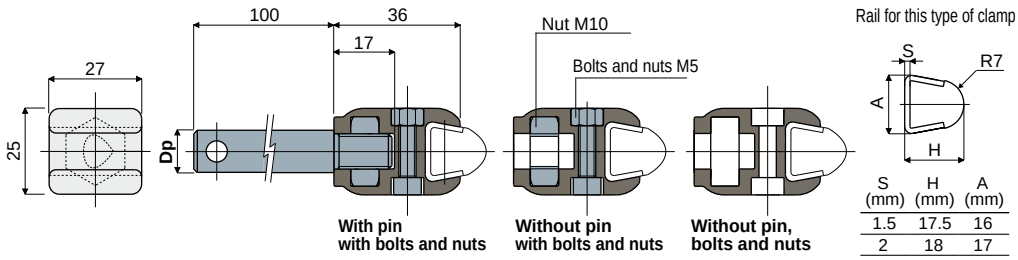

S (mm)	H (mm)	A (mm)
1.5	17.5	16
2	18	17

Dp Pin diameter (mm)	With pin with bolts and nuts Code	Without pin with bolts and nuts Code	Without pin, bolts and nuts Code
12	205 / 80814		
14	205 / 80815	205 / 80817	205 / 80982
16	205 / 80816		

MATERIALS: Clamp made of reinforced polyamide black colour; pin, bolts and nuts made of stainless steel AISI 304.
FEATURES: Supplied with or without support pin and with or without bolts and nuts.
With this item it is possible to use thickness 1,5 and 2 mm guides: Part.354, 377, 419, 418, 420, 353.
BOX QUANTITY: 24 pieces.
ON REQUEST:
- **Clamps:** In reinforced polypropylene, other colours.
- **Box quantity:** According to your request.

Guide rail clamps

Part. 412 Guide rail clamp

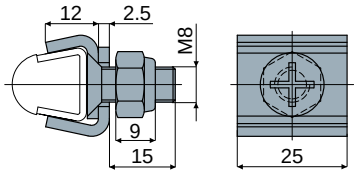

Example of application

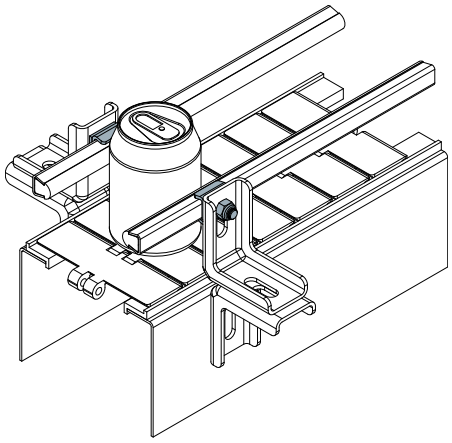

Code
412 / 84487

MATERIALS: Clamp, bolts and nuts made of stainless steel AISI 304.
FEATURES: With this item it is possible to use thickness 1,5 and 2 mm guides: Part.354, 377, 419, 418, 420, 353.
BOX QUANTITY: 24 pieces.
ON REQUEST:
- Box quantity: According to your request.
- Assembly of: Bolts and nuts.

Part. 413 Guide rail clamp (for connection)

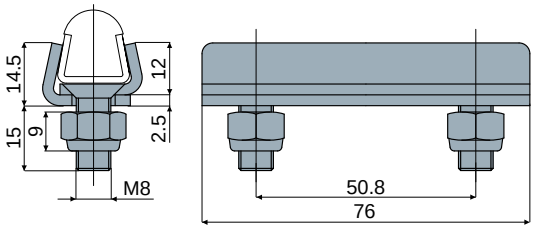

Example of application

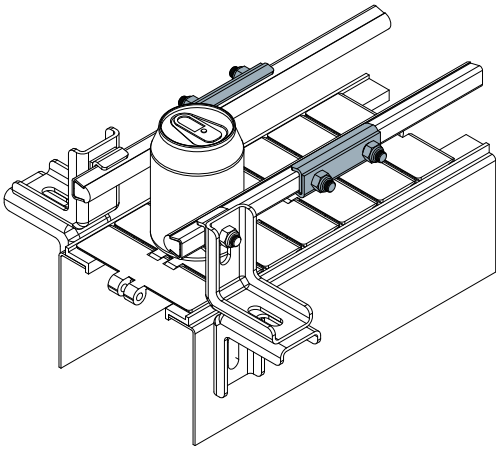

Code
413 / 84488

MATERIALS: Clamp, bolts and nuts made of stainless steel AISI 304.
FEATURES: With this item it is possible to use thickness 1,5 and 2 mm guides: Part.354, 377, 419, 418, 420, 353.
BOX QUANTITY: 24 pieces.
ON REQUEST:
- Box quantity: According to your request.
- Assembly of: Bolts and nuts.

Guide rail clamps

Example of application

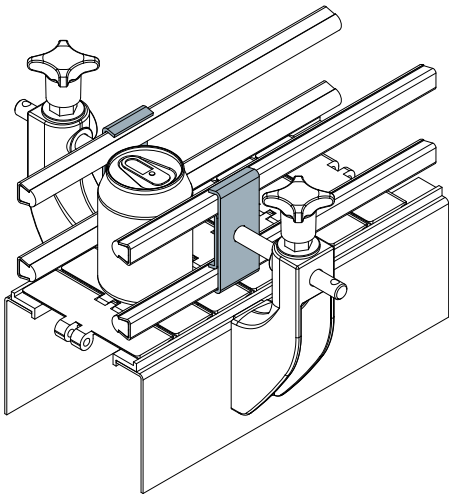

Guide rail clamp (double) Part. 410

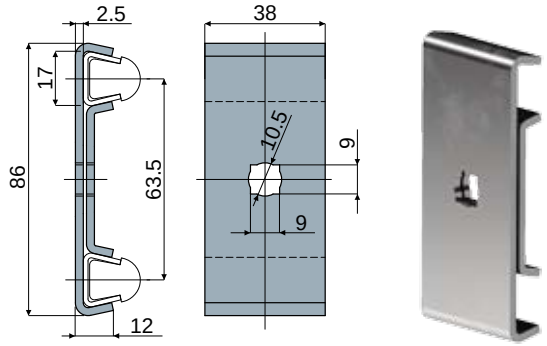

Code
410 / 84485

MATERIALS: Clamp made of stainless steel AISI 304.
FEATURES: With this item it is possible to use thickness 1,5 and 2 mm guides: Part.354, 377, 419, 418, 420, 353.
BOX QUANTITY: 24 pieces.
ON REQUEST:

- Box quantity: According to your request.

Example of application

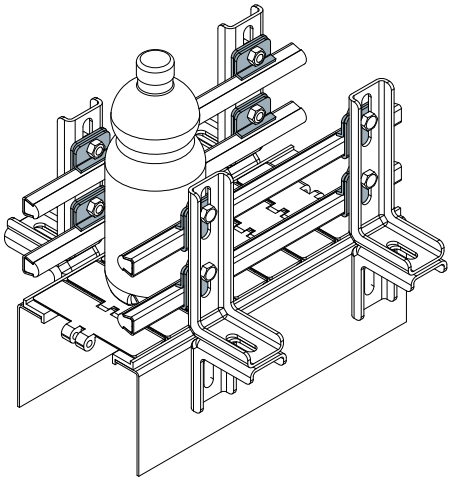

Guide rail clamp Part. 411

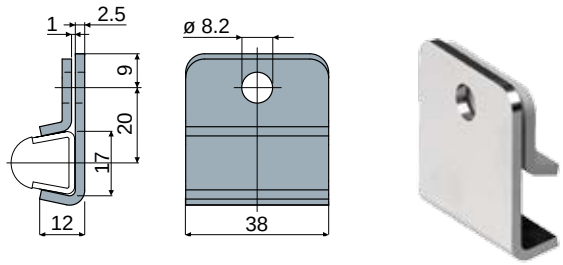

Code
411 / 84486

MATERIALS: Clamp made of stainless steel AISI 304.
FEATURES: With this item it is possible to use thickness 1,5 and 2 mm guides: Part.354, 377, 419, 418, 420, 353.
BOX QUANTITY: 24 pieces.
ON REQUEST:

- Box quantity: According to your request.

Guide rail clamps

Part. 405 Guide rail clamp
(for round rails)

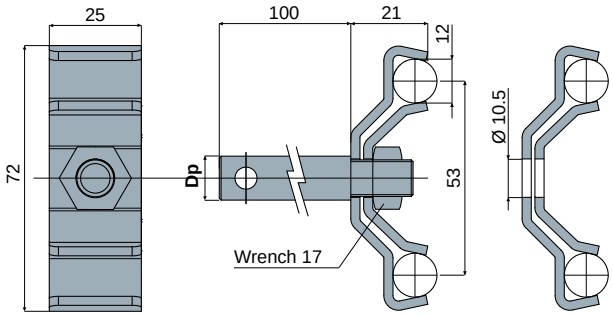

With pin Without pin

Dp Pin diameter (mm)	With pin Code	Without pin Code
12	405 / 84327	
14	405 / 84442	405 / 85101
16	405 / 84443	

MATERIALS: Clamp, mounting plate, nut and threaded pin made of stainless steel AISI 304.
FEATURES: Supplied with or without pin.
BOX QUANTITY: 24 pieces.
ON REQUEST:
- Box quantity: According to your request.
- Assembly of: Bolts and nuts.

Example of application

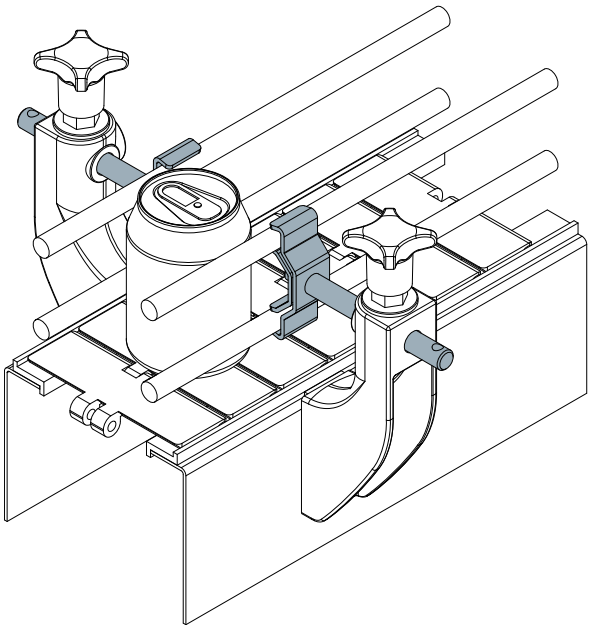

Part. 424 Guide rail clamp

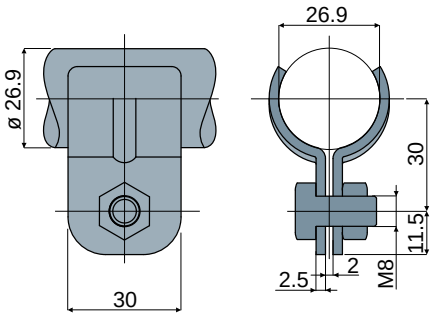

Code
424 / 84961

MATERIALS: Clamp, bolts and nuts in stainless steel AISI 304.
BOX QUANTITY: 24 pieces.
ON REQUEST:
- Box quantity: According to your request.
- Assembly of: Bolts and nuts.

Example of application

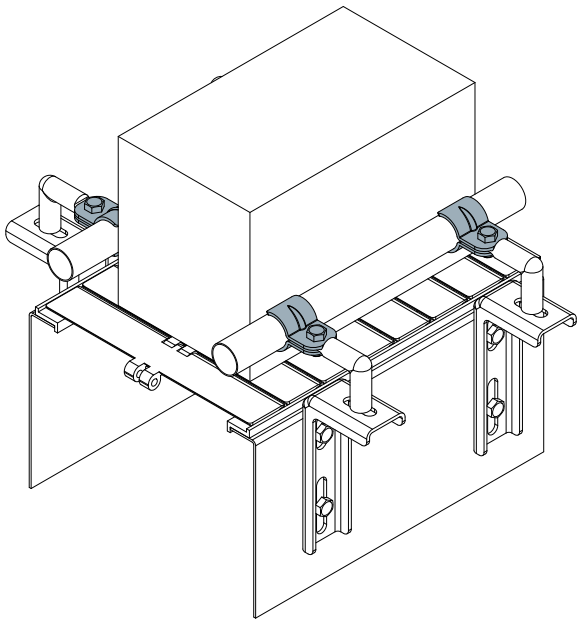

Guide rail clamps

Example of application

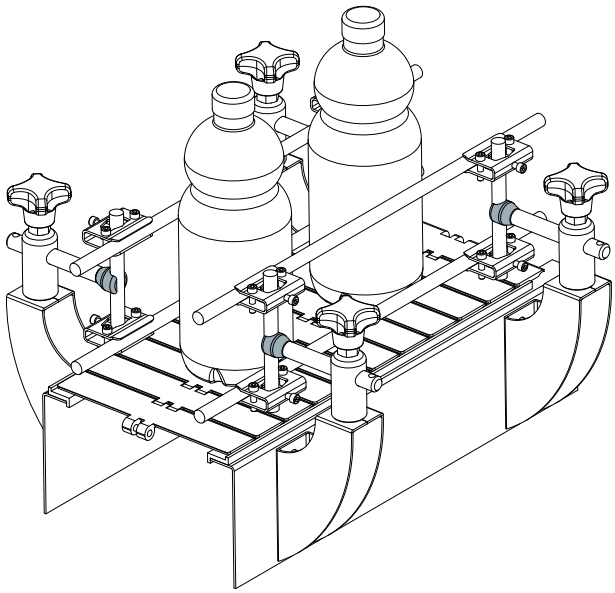

Guide rail clamp Part. 443

NEW

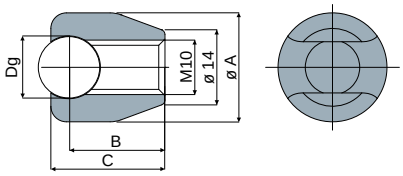

Dg Rail diameter (mm)	Code	Ø A (mm)	B (mm)	C (mm)
12	**443 / 85275**	21	18.5	22

MATERIALS: Clamp made of stainless steel AISI 304.
BOX QUANTITY: 24 pieces.
ON REQUEST:
- **Box quantity:** According to your request.

Example of application

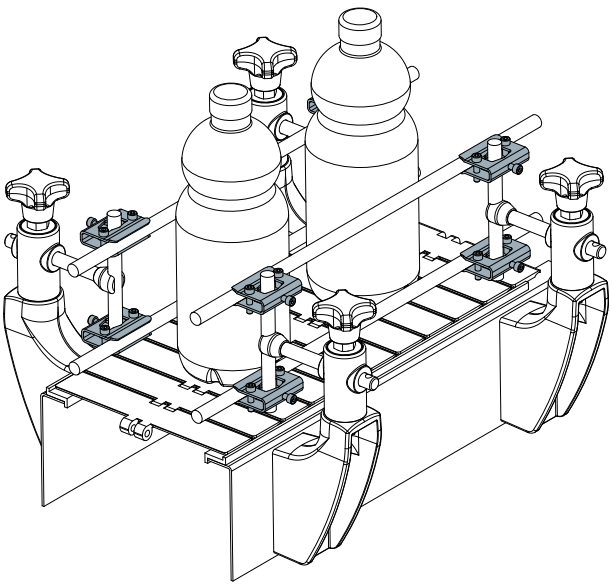

Guide rail clamp (for round rails) Part. 440

NEW

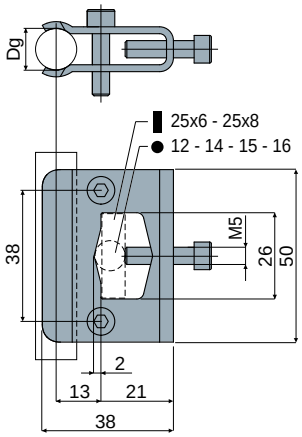

Dg Rail diameter (mm)	Code
12	**440 / 85240**

MATERIALS: Clamp, bolts and nuts in stainless steel AISI 304.
FEATURES: Supplied with bolts and nuts.
BOX QUANTITY: 24 pieces.
ON REQUEST:
- **Box quantity:** According to your request.

Guide rail clamps

Part. 439 Guide rail clamp
(for trapezoidal rails)

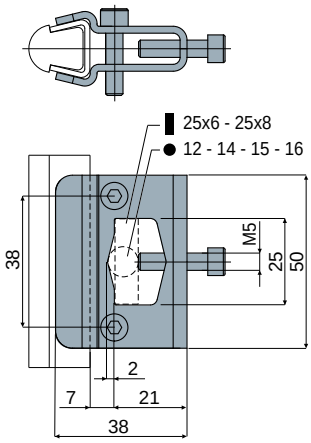

Code
439 / 85239

MATERIALS: Clamp, bolts and nuts in stainless steel AISI 304.
FEATURES: Supplied with bolts and nuts.
BOX QUANTITY: 24 pieces.
ON REQUEST:
- Box quantity: According to your request.

Example of application

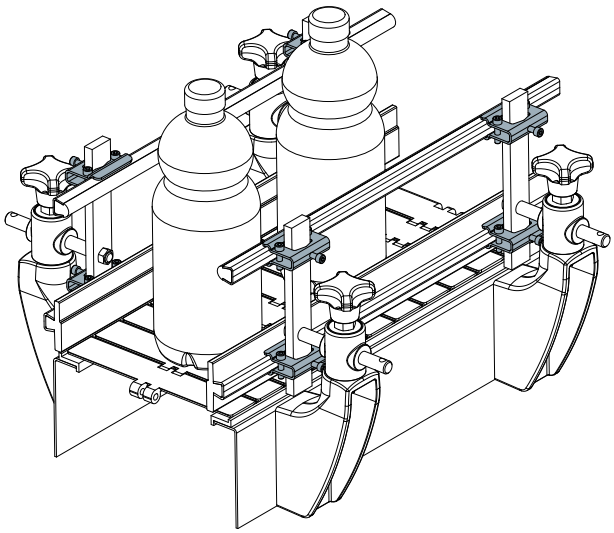

Guide rail clamps

Guide rail clamp

Part. **427**

Example of application

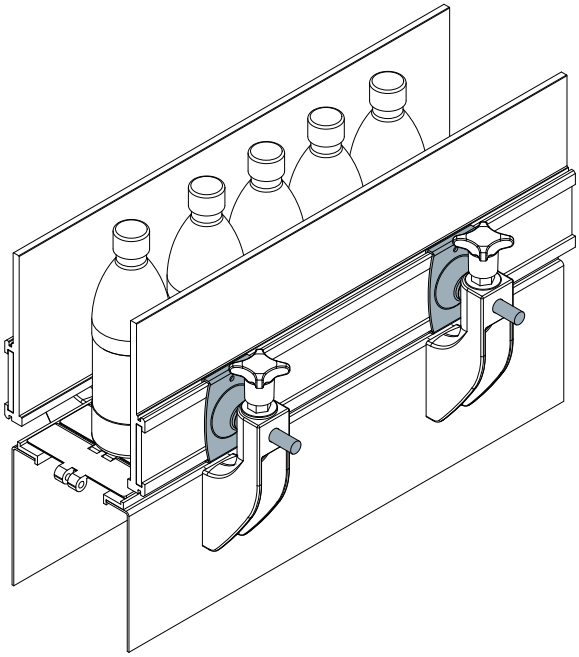

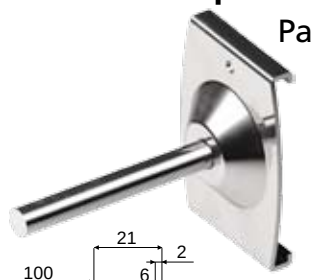

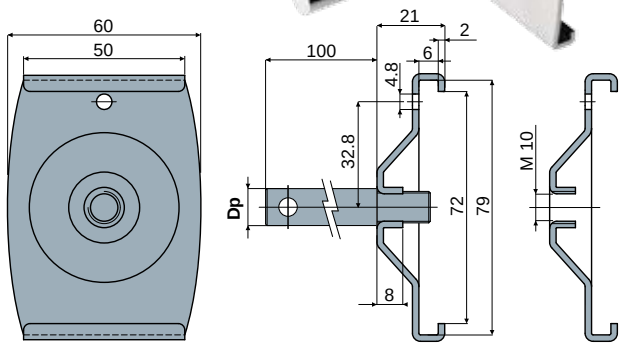

With pin — Without pin

Dp Pin diameter (mm)	With pin Code	Without pin Code
12	427 / 85097	
14	427 / 85098	427 / 85009
16	427 / 85099	

MATERIALS: Clamp and pin in stainless steel AISI 304.
FEATURES: Supplied with or without pin.
To be used with side guides Part. 425, 426.
BOX QUANTITY: 24 pieces.
ON REQUEST:
- Assembling of: Pins.
- Box quantity: According to your request.

Guide rail clamp

Part. **434**

Example of application

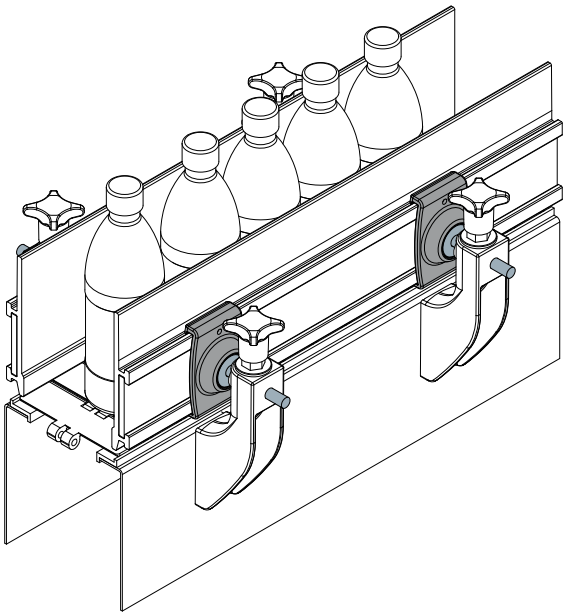

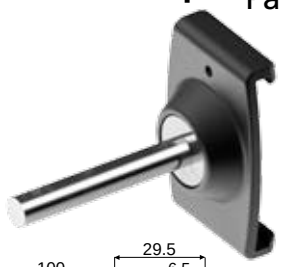

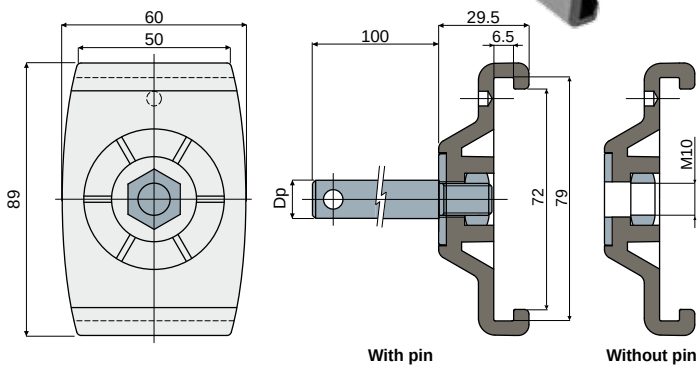

With pin — Without pin

Dp Pin diameter (mm)	With pin Code	Without pin Code
12	434 / 85093	
14	434 / 85094	434 / 85100
16	434 / 85095	

MATERIALS: Clamp is made of reinforced polyamide; threaded pin, washer and nut in stainless steel AISI 304.
FEATURES: Supplied with or without pin.
To be used with side guides Part. 425, 426.
BOX QUANTITY: 8 pieces.
ON REQUEST:
- Assembling of: Pins, washers and nuts.
- Box quantity: According to your request.

Clamps

Part. 206 Clamp support for photocells
(for photocells and reflectors)

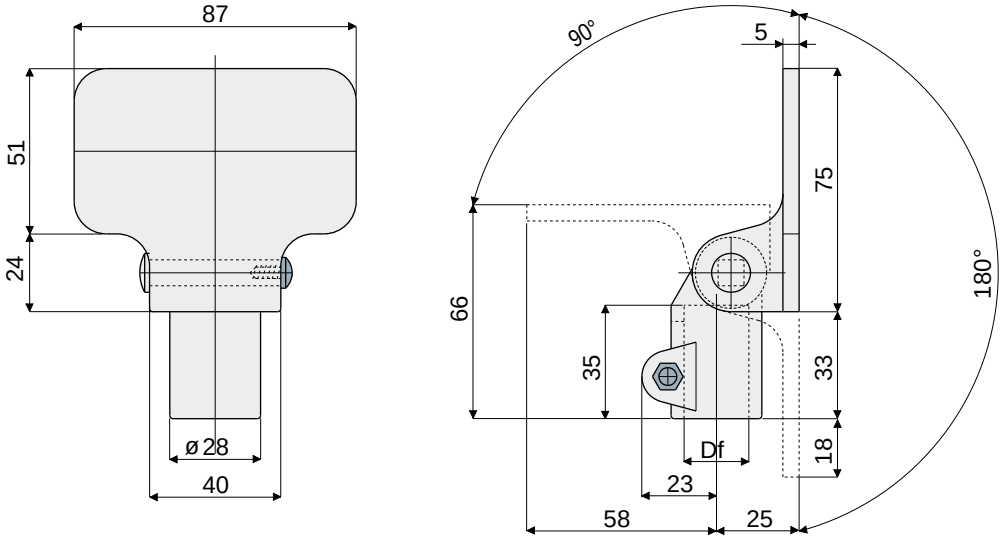

Df Bore for pin of (mm)	Code
12	206 / 82010 (can be used also with square pins 10x10)
14	206 / 80818
15	206 / 80819
16	206 / 80820
18	206 / 80821
20	206 / 80822

MATERIALS: Clamp made of reinforced polyamide black colour; bolts and nuts made of stainless steel AISI 304.
FEATURES: Possibility of assembly in various positions.
BOX QUANTITY: 24 pieces.
ON REQUEST:
- Clamps: In reinforced polypropylene, other colours.
- Box quantity: According to your request.

Clamps

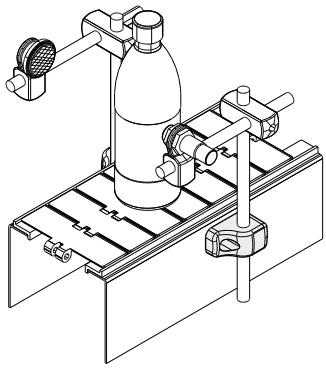

With blocking pin
(Suitable to support photocells)

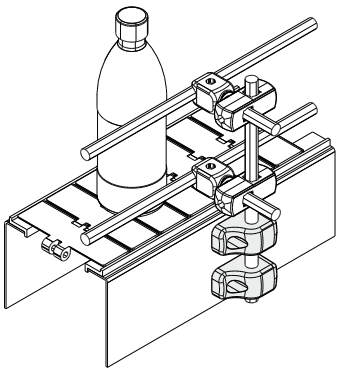

Without blocking pin
(Suitable to support guide)

Example of application

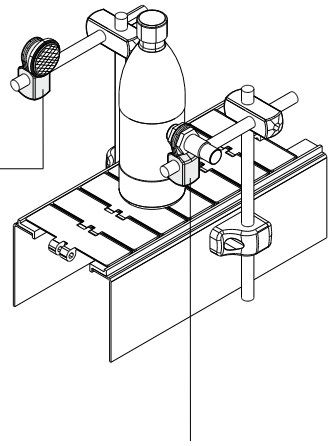

Type 2 (For reflectors)

Type 1 (For photocells)

Clamp
(to support rails and photocells)

Part. **237**

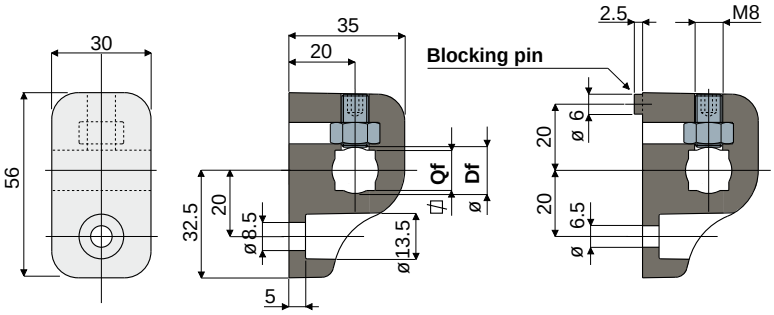

Without blocking pin **With blocking pin**

Bore for pin of Df round (mm)	Bore for pin of Qf square (mm)	Without blocking pin Code	With blocking pin Code
10	8	237 / 80958	237 / 80961
12	10	237 / 80959	237 / 80962
14	12	237 / 80960	237 / 80963

Clamp support for photocells
(for photocells and reflectors)

Part. **240**

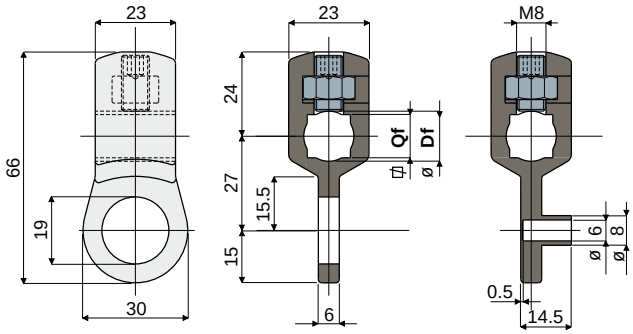

Type 1 (For photocells) **Type 2** (For reflectors)

Bore for pin of Df round (mm)	Bore for pin of Qf square (mm)	Type 1 (for photocells) Code	Type 2 (for reflectors) Code
10	8	240 / 80996	240 / 80997
12	10	240 / 80998	240 / 80999
14	12	240 / 81000	240 / 81001

MATERIALS: Clamp made of reinforced polyamide black colour; screw and nuts made of stainless steel AISI 304.

FEATURES: This part can be used with round and square pins either.

BOX QUANTITY: 24 pieces.

ON REQUEST:

- **Clamps:** In reinforced polypropylene, other colours.
- **Box quantity:** According to your request.

Clamps

Part. 238 "T" clamp
(to support rails and photocells)

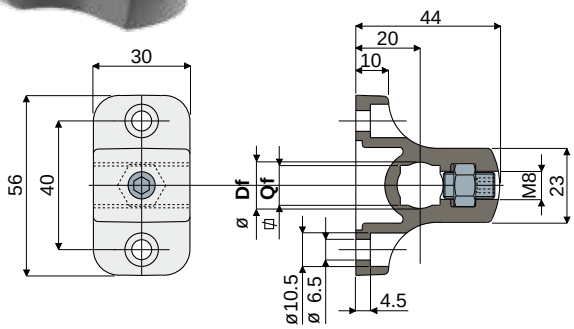

Bore for pin of		Code
Df round (mm)	Qf square (mm)	
10	8	238 / 80985
12	10	238 / 80986
14	12	238 / 80987

MATERIALS: Clamp made of reinforced polyamide black colour; screw and nuts made of stainless steel AISI 304.
FEATURES: This part can be used with round and square pins either.
BOX QUANTITY: 24 pieces.
ON REQUEST:
- Clamps: With different bores sizes, in reinforced polypropylene, other colours.
- Box quantity: According to your request.

Part. 324 Spacer for clamp
(for "T" clamp Part. 238)

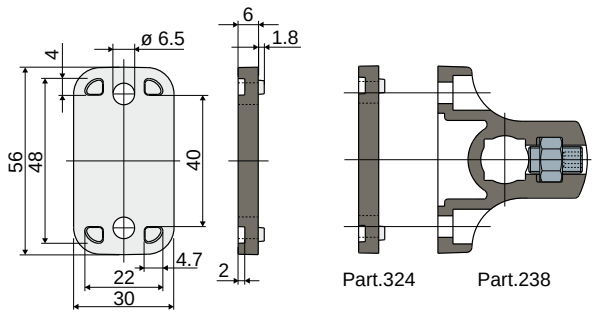

Code
324 / 82971

MATERIALS: Spacer made of reinforced polyamide black colour.
FEATURES: Accessory to be applied to "T" clamp Part.238.
BOX QUANTITY: 24 pieces.
ON REQUEST:
- Spacers: In reinforced polypropylene, other colours.
- Box quantity: According to your request.

Example of applications

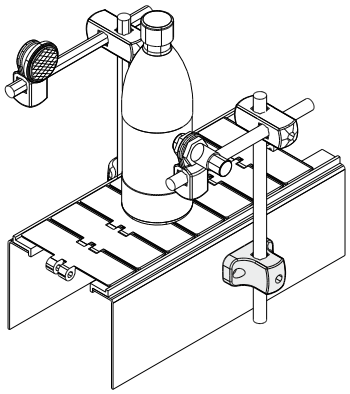

To support photocells

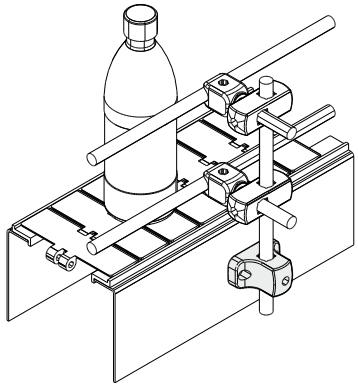

To support guide

Example of application

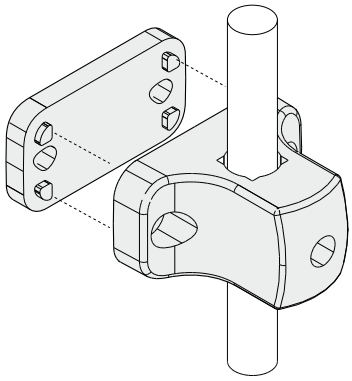

Clamps

Example of application

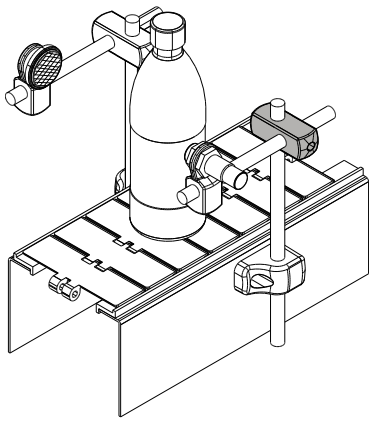

Cross clamp Part. 239

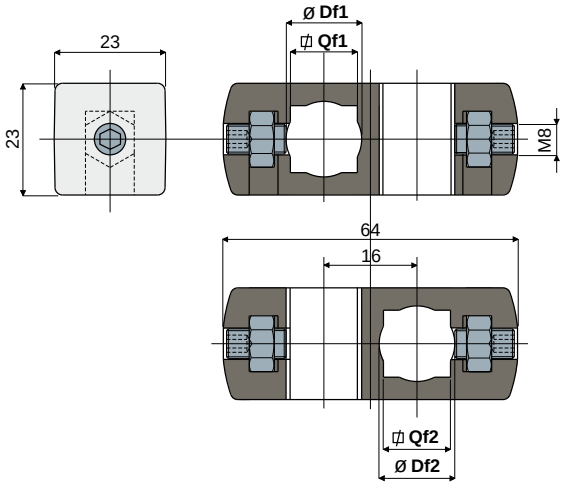

Bore for pin of		Bore for pin of		Code
Df1 round (mm)	Qf1 square (mm)	Df2 round (mm)	Qf2 square (mm)	
10	8	10	8	239 / 80993
12	10	12	10	239 / 80994
14	12	14	12	239 / 80995

MATERIALS: Clamp made of reinforced polyamide black colour; bolts and nuts made of stainless steel AISI 304.
FEATURES: This part can be used with round and square pins either.
BOX QUANTITY: 24 pieces.
ON REQUEST:

- Clamps: With different bores sizes, in reinforced polypropylene, other colours.
- Box quantity: According to your request.

Example of application

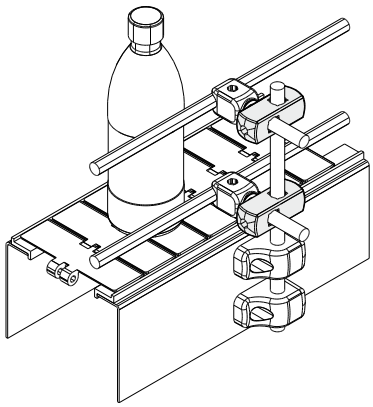

Cross clamp Part. 241

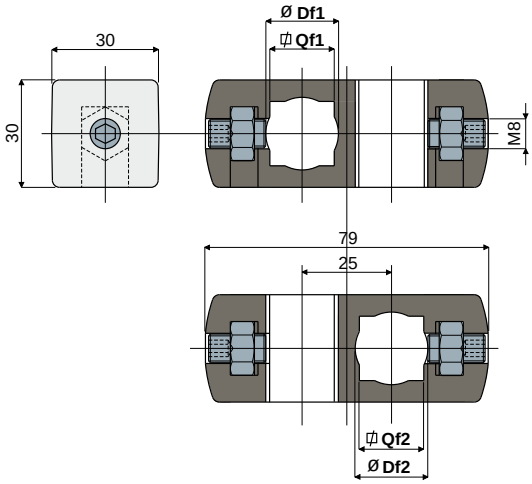

Bore for pin of		Bore for pin of		Code
Df1 round (mm)	Qf1 square (mm)	Df2 round (mm)	Qf2 square (mm)	
14	12	14	12	241 / 80988
15	-	15	-	241 / 80989
16	-	16	-	241 / 80990
18	-	18	-	241 / 80991
20	-	20	-	241 / 80992

MATERIALS: Clamp made of reinforced polyamide black colour; bolts and nuts made of stainless steel AISI 304.
FEATURES: This part can be used with round and square pins either, only in the version Df1 14.
BOX QUANTITY: 24 pieces.
ON REQUEST:

- Clamps: With different bores sizes, in reinforced polypropylene, other colours.
- Box quantity: According to your request.

Clamps

Part. 297 Cross block

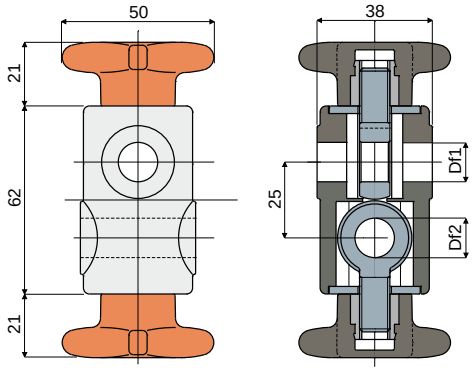

Df1 Bore for pin of (mm)	Df2 Bore for pin of (mm)	Code
12	12	297 / 82658

MATERIALS: Housing in reinforced polyamide black colour and knob in reinforced polyamide orange colour; eyebolts in stainless steel AISI 304; threaded insert in nickel plated brass.

FEATURES: To be used to support the rail-holder pins.

BOX QUANTITY: 24 pieces.

ON REQUEST:

- Housings and Knobs: in reinforced polypropylene, other colours.
- Box quantity: According to your request.

Example of application

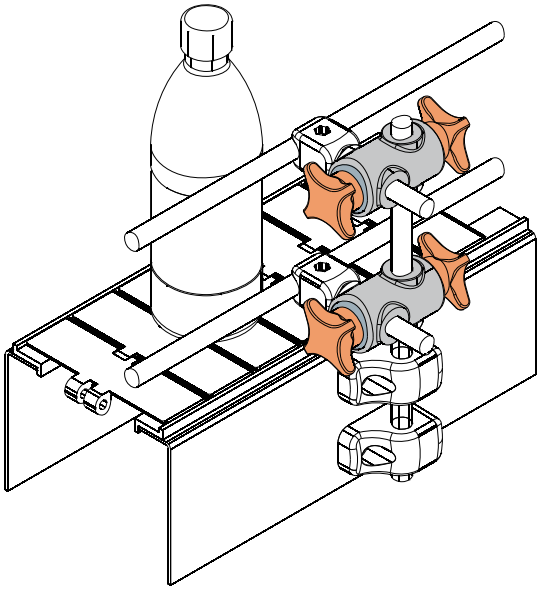

Part. 312 Cross block

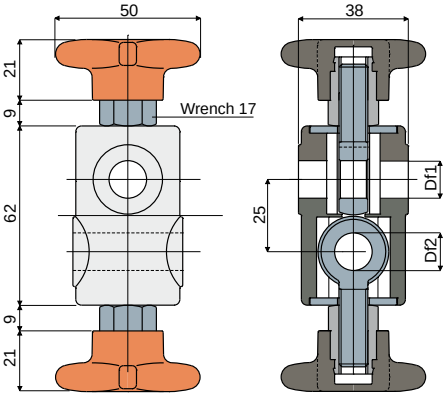

Df1 Bore for pin of (mm)	Df2 Bore for pin of (mm)	Code
12	12	312 / 82845
14	14	312 / 82846
16	16	312 / 82847

MATERIALS: Housing in reinforced polyamide black colour and knob in reinforced polyamide orange colour; eyebolts in stainless steel AISI 304; threaded insert in nickel plated brass.

FEATURES: To be used to support the rail-holder pins.

BOX QUANTITY: 24 pieces.

ON REQUEST:

- Housings and Knobs: in reinforced polypropylene, other colours.
- Box quantity: According to your request.

Example of application

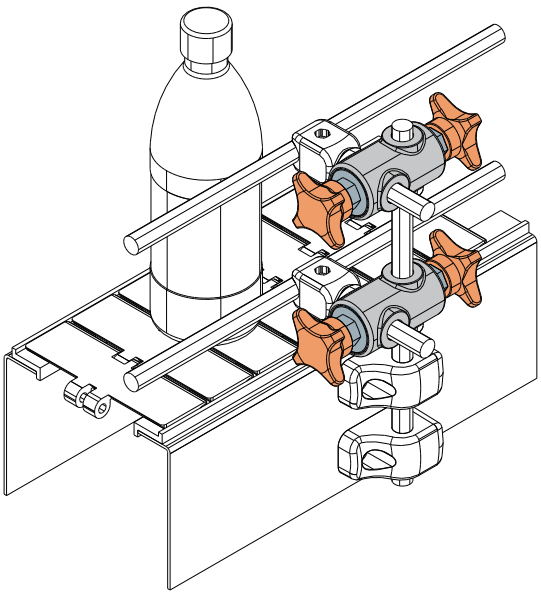

Clamps

Cross clamp for central roller guides support

Part. **435**

Example of application

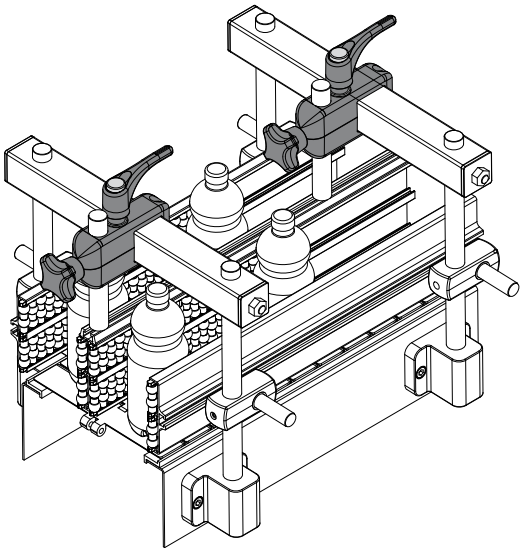

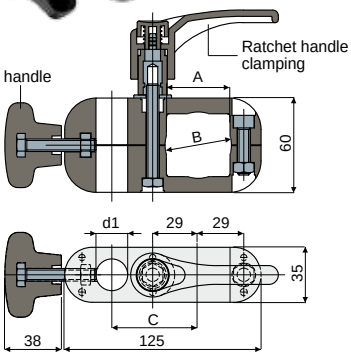

Type 1

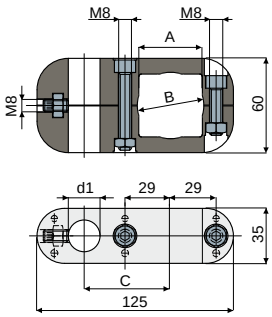

Type 2

Square tube	Round tube		pin ø	Type 1	Type 2
A	B	C	d1	Code	Code
40	42,4	58	15-16	**435 / 85166**	**435 / 85167**
		56	20	**435 / 85168**	**435 / 85169**

MATERIALS: Clamp and handles are made of reinforced polyamide black colour; nuts, screws and washer in stainless steel AISI 304.
FEATURES: They are used to support the central rollers side guides.
BOX QUANTITY: 8 pieces.
ON REQUEST:
- **Assembling of:** Handles, bolts and nuts.
- **Box quantity:** According to your request.

Bushing for eyebolt

Part. **333**

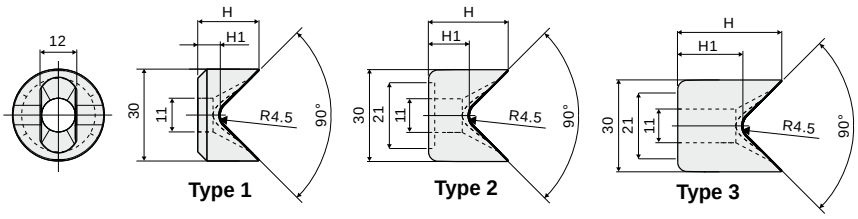

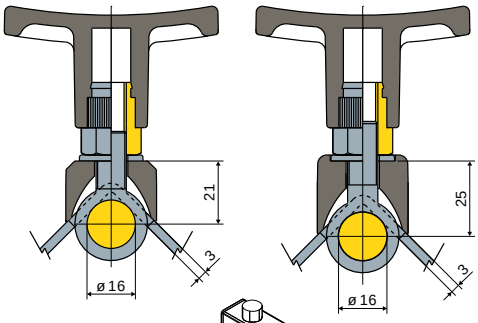

H	H1	Type 1
(mm)	(mm)	Code
20	7,3	**333 / 83117**

H	H1	Type 2
(mm)	(mm)	Code
26	13,3	**333 / 83115**

H	H1	Type 3
(mm)	(mm)	Code
34	21,3	**333 / 84025**

MATERIALS: Bushing made of reinforced polyamide black colour.
FEATURES: To be used with the eyebolts to block the pins holding the transport guides.
BOX QUANTITY: 24 pieces.
ON REQUEST:
- **Bushings:** With different heights, in reinforced polypropylene, other colours.
- **Box quantity:** According to your request.

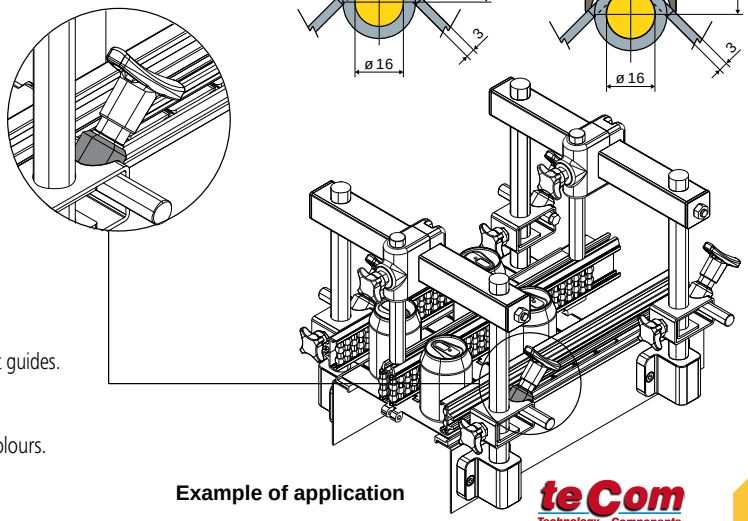

Example of application

Shoes

Part. 428 Product guide shoe

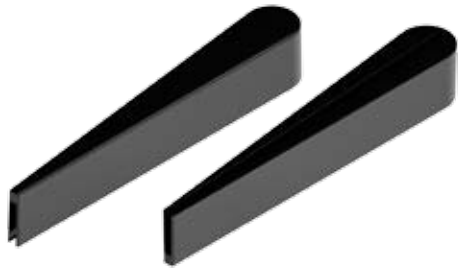

Type 1

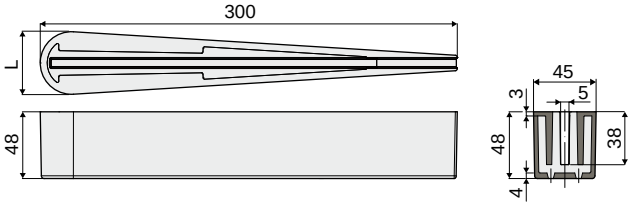

L	Type 1
(mm)	Code
45	**428 / 85063**

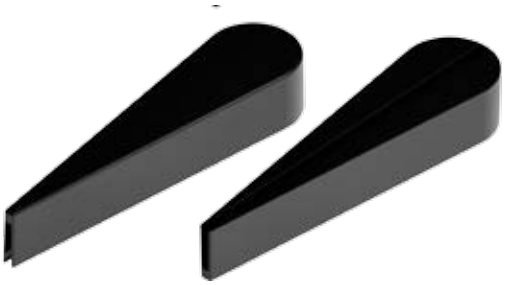

Type 2

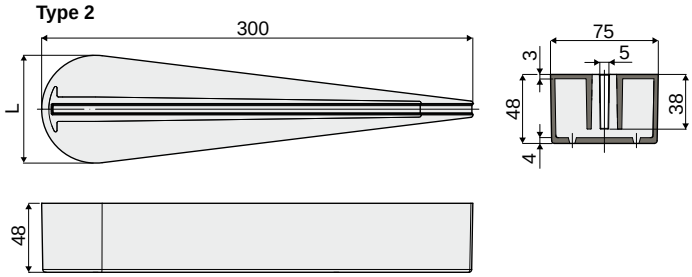

L	Type 2
(mm)	Code
75	**428 / 85064**

MATERIALS: Internal part made of reinforced polypropylene, black colour; external covering in polyethylene , black colour.
FEATURES: To be used as product guide in the conveyor systems.
BOX QUANTITY: 12 pieces.
ON REQUEST:

- **Box quantity:** According to your request.

Example of application

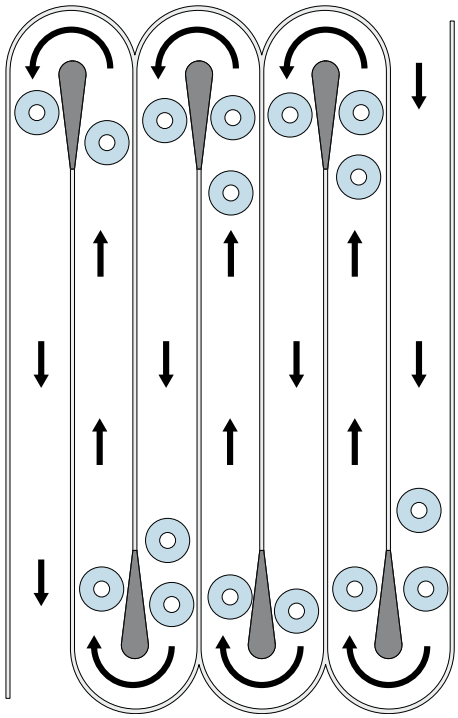

Example of application

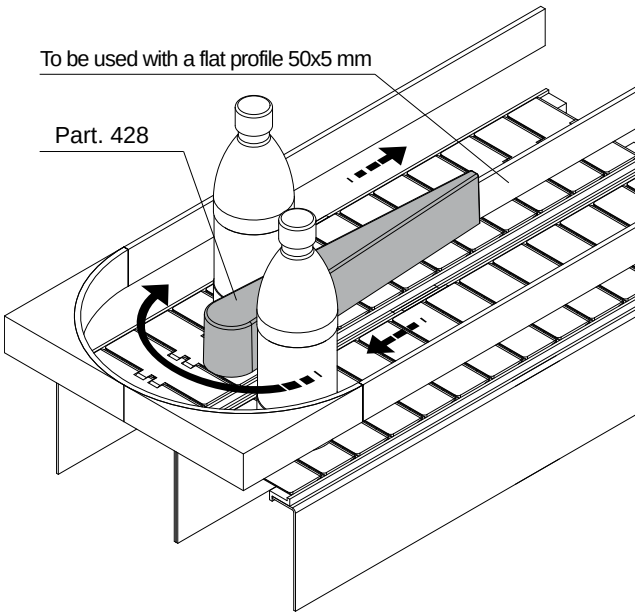

Shoes

Self-adjusting sliding shoe for chain return Part. 267

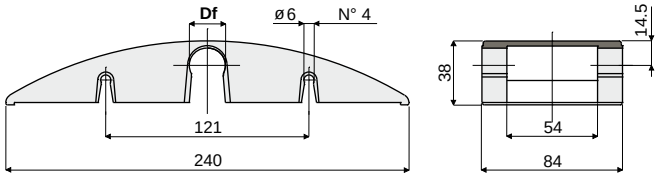

Df Bore for pin of (mm)	Polyamide (black colour) Code	Polyethylene (green colour) Code
18	267 / 82038	267 / 82812
20	267 / 82039	267 / 82813

MATERIALS: Sliding shoe is made of polyamide black colour or of polyethylene green colour.
FEATURES: To be assembled in the chain return near to the sprocket. Snap-on assembly.
BOX QUANTITY: 12 pieces.
ON REQUEST:
- **Sliding shoes:** Other bore sizes, and colours.
- **Box quantity:** According to your request.

Shoe for chain return Part. 359
(for raised rib chains)

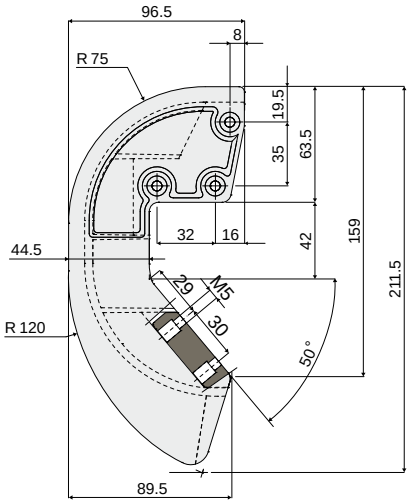

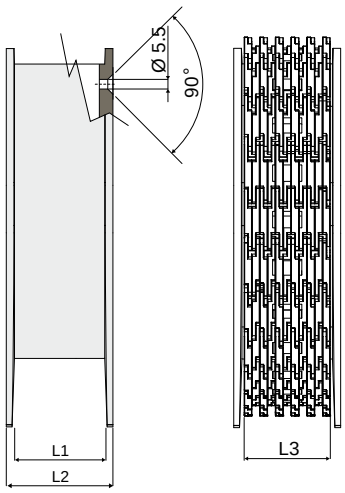

Code	L1	L2	L3 (Chain width)
359 / 83504	41	50	38.5
359 / 83503	49	58.5	47

MATERIALS: Shoe in black polyethylene;
screws in stainless steel AISI 304.
FEATURES: Supplied complete with screws.
To be used in the idler part of the conveyor.
BOX QUANTITY: 8 pieces.
ON REQUEST:
- **Shoes:** Other colours.
- **Box quantity:** According to your request.

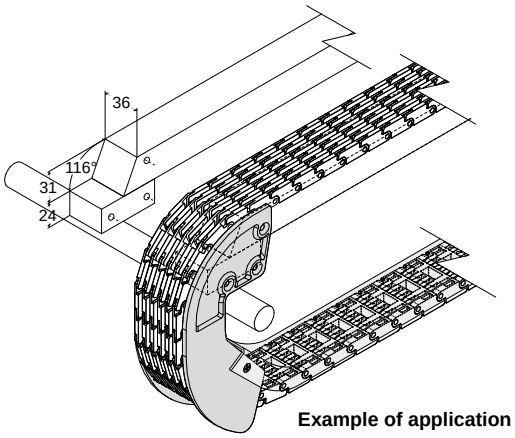

Example of application

Chain tensioners

Part. 277 Chain tensioner with sliding shoe

(for roller chain type DIN 8187 08-B1 and 08-B2)

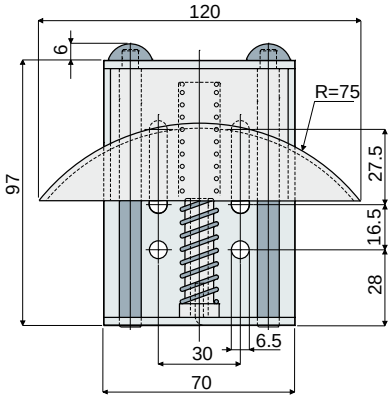

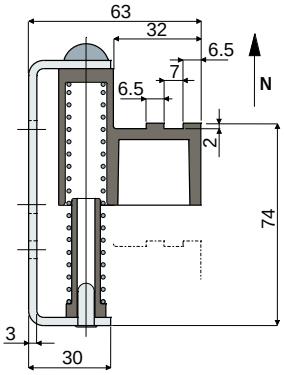

Code	Min. tension load (N)	Max. tension load (N)
277 / 82068	60	110

MATERIALS: External part, pin and spring are made of zinc plated steel; sliding shoe and spring guide are made of polyamide black colour.
FEATURES: To be assembled in the transmissions with roller chain to stretch it.
BOX QUANTITY: 12 pieces.
ON REQUEST:

- **Sliding shoes:** Different shapes for different chains, other materials and colours.
- **Box quantity:** According to your request.

Part. 278 Chain tensioner with sprocket

(for roller chain type DIN 8187 08-B1)

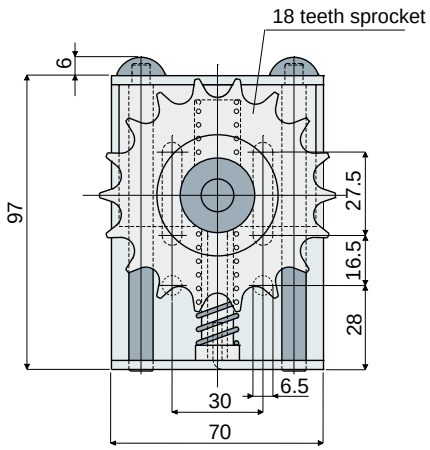

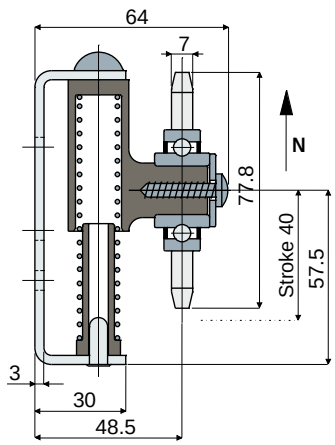

Code	Min. tension load (N)	Max. tension load (N)
278 / 82069	60	110

MATERIALS: External part, sprocket, pins and spring are made of zinc plated steel; cursor and spring guide are made of polyamide black colour.
FEATURES: To be assembled in the transmissions with roller chain to stretch it.
BOX QUANTITY: 12 pieces.
ON REQUEST:

- **Sprockets:** With other number of teeth.
- **Box quantity:** According to your request.

Return rollers

Example of application

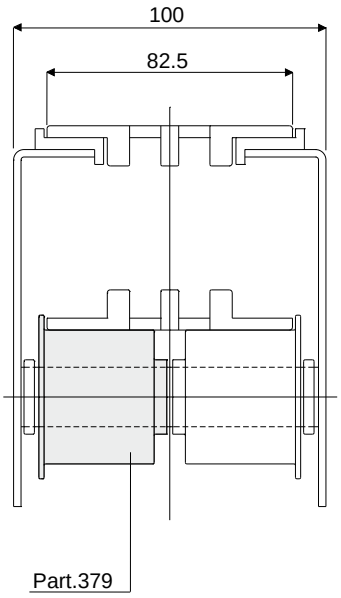

Roller for chain return (with flange) Part. 379

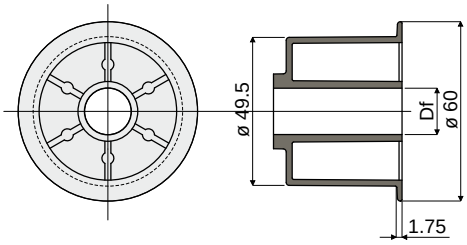

Df Bore for pin of (mm)	Code
15	379 / 84069
20	379 / 84070

MATERIALS: Roller made of reinforced polyamide, black colour.
FEATURES: To be assembled in the chain return.
BOX QUANTITY: 96 pieces.
ON REQUEST:
- Rollers: with special bores, in different colours.
- Box quantity: according to your request.

Example of application

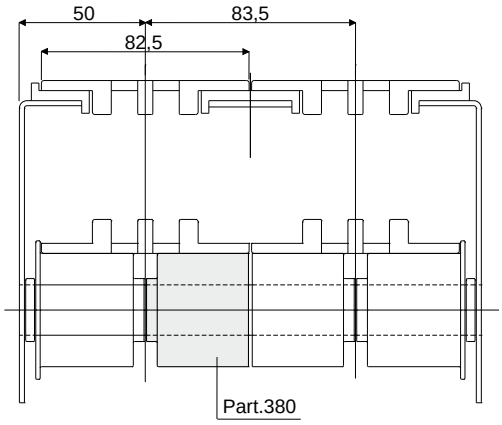

Roller for chain return (without flange) Part. 380

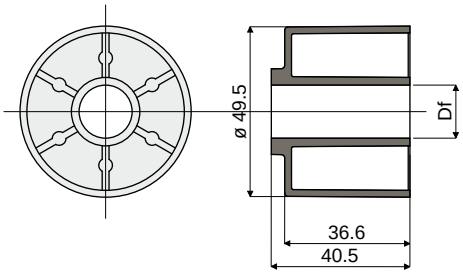

Df Bore for pin of (mm)	Code
15	380 / 84071
20	380 / 84072

MATERIALS: Roller made of reinforced polyamide, black colour.
FEATURES: To be assembled in the chain return.
BOX QUANTITY: 96 pieces.
ON REQUEST:
- Rollers: With special bores, in different colours.
- Box quantity: According to your request.

Return rollers

Part. 270 Roller for chain return
(with flange)

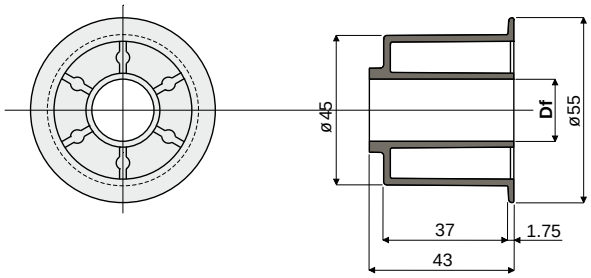

Df Bore for pin of (mm)	Code
15	270 / 82042
20	270 / 82043

MATERIALS: Roller made of polyamide black colour.
FEATURES: To be assembled in the chain return.
BOX QUANTITY: 96 pieces.
ON REQUEST:
- Rollers: Special bores, other colours.
- Box quantity: According to your request.

Example of application

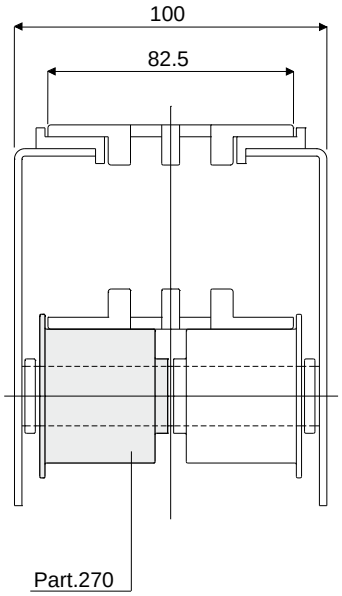

Part. 271 Roller for chain return
(without flange)

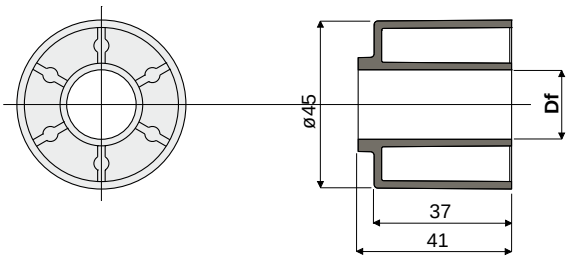

Df Bore for pin of (mm)	Code
15	271 / 82044
20	271 / 82045

MATERIALS: Roller made of polyamide black colour.
FEATURES: To be assembled in the chain return.
BOX QUANTITY: 96 pieces.
ON REQUEST:
- Rollers: Special bores, other colours.
- Box quantity: According to your request.

Example of application

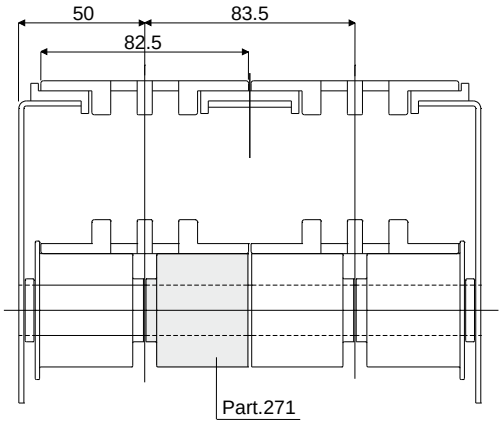

Return rollers

Example of application

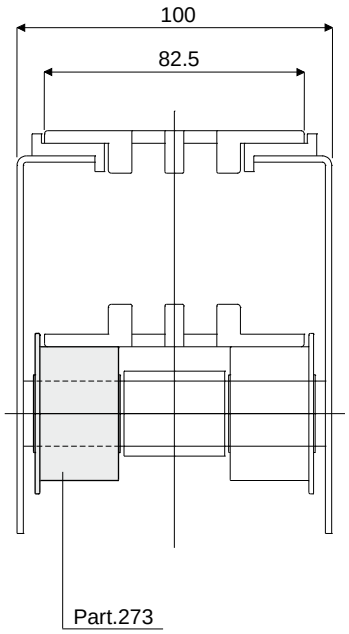

Roller for chain return
(with flange)

Part. **273**

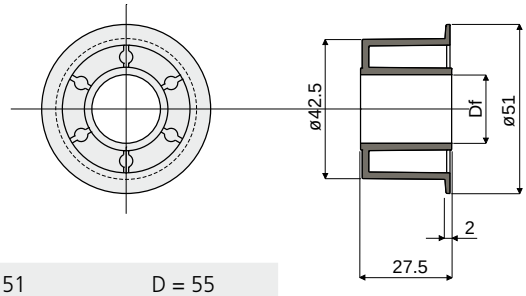

Df Bore for pin of (mm)	D = 51	D = 55
	Code	Code
12	273 / 82048	273 / 85337
16	273 / 82049	273 / 85338
18	273 / 82050	273 / 85339
20	273 / 82051	273 / 85340

MATERIALS: Roller made of polyamide black colour.
FEATURES: To be assembled in the chain return.
BOX QUANTITY: 96 pieces.
ON REQUEST:
- **Rollers:** Special bores, other colours.
- **Box quantity:** According to your request.

Example of application

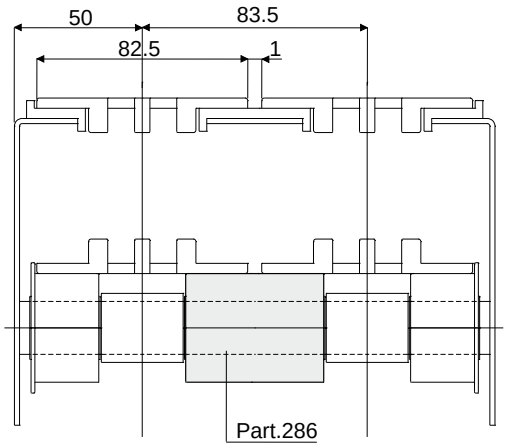

Double roller for chain return
(without central flange)

Part. **286**

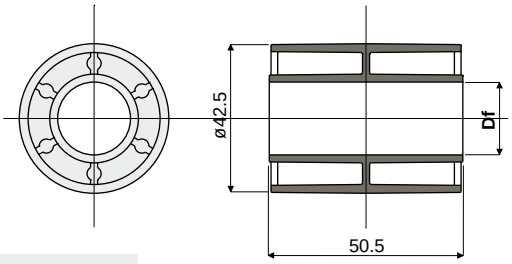

Df Bore for pin of (mm)	Code
12	286 / 82532
16	286 / 82533
18	286 / 82534
20	286 / 82535

MATERIALS: Roller made of polyamide black colour.
FEATURES: To be assembled in the chain return.
BOX QUANTITY: 96 pieces.
ON REQUEST:
- **Rollers:** Special bores, other colours.
- **Box quantity:** According to your request.

Return rollers

Part. 287 Double roller for chain return
(with central flange)

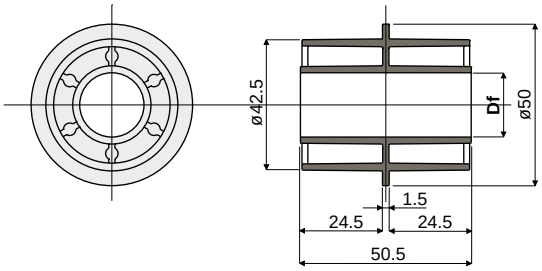

Df Bore for pin of (mm)	Code
12	287 / 82536
16	287 / 82537
18	287 / 82538
20	287 / 82539

MATERIALS: Roller made of polyamide black colour.
FEATURES: To be assembled in the chain return.
BOX QUANTITY: 96 pieces.
ON REQUEST:
- Rollers: Special bores, other colours.
- Box quantity: According to your request.

Example of application

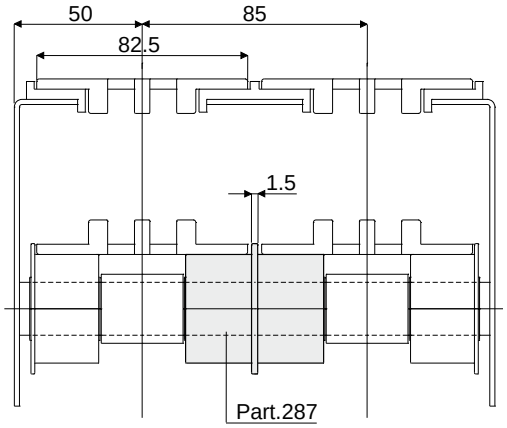

Part. 274 Double roller for chain return
(with central flange)

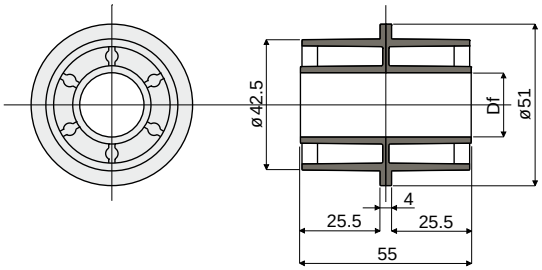

Df Bore for pin of (mm)	Code
12	274 / 82052
16	274 / 82053
18	274 / 82054
20	274 / 82055

MATERIALS: Roller made of polyamide black colour.
FEATURES: To be assembled in the chain return.
BOX QUANTITY: 96 pieces.
ON REQUEST:
- Rollers: Special bores, other colours.
- Box quantity: According to your request.

Example of application

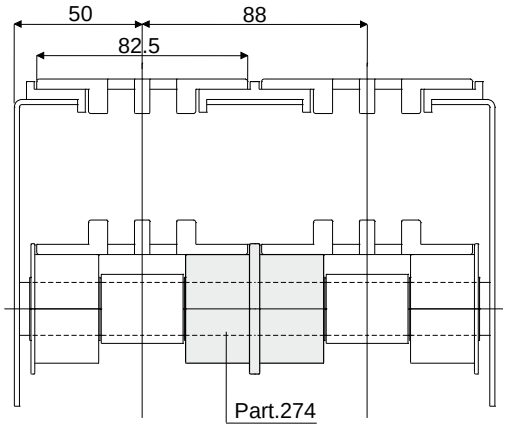

Return rollers

Spacer for rollers for chain return Part. 275

Example of application

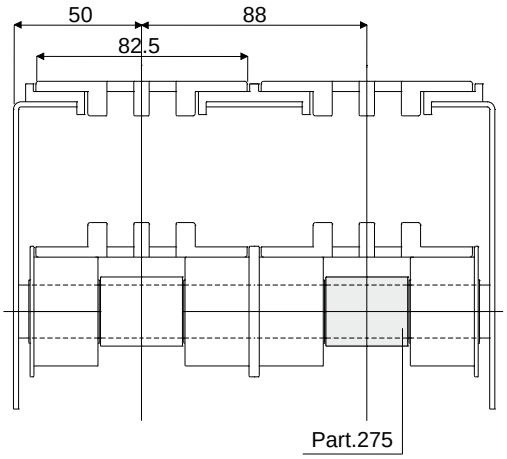

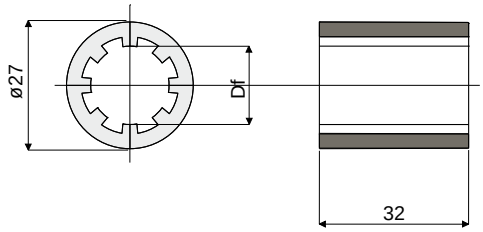

Df Bore for pin of (mm)	Code
12	275 / 82056
16	275 / 82057
18	275 / 82058
20	275 / 82059

MATERIALS: Spacer made of polyamide black colour.
FEATURES: To be assembled in the chain return.
BOX QUANTITY: 96 pieces.
ON REQUEST:

- **Spacers:** Special bores, other colours.
- **Box quantity:** According to your request.

Spacer for rollers for chain return Part. 272

Example of application

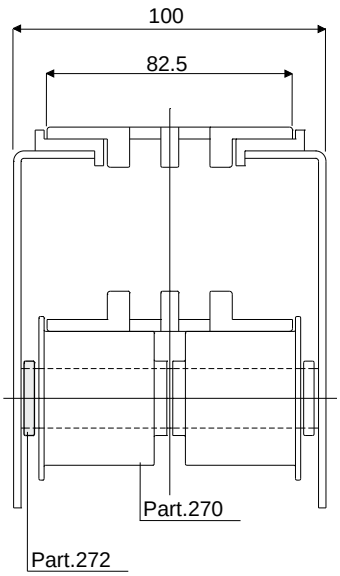

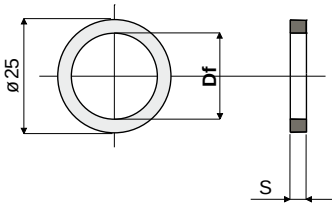

Df Bore for pin of (mm)	S	Code
15	3,5	272 / 82046
20	3,5	272 / 82047
20	5,0	272 / 85186

MATERIALS: Spacer made of polyamide black colour.
FEATURES: To be assembled in the chain return.
BOX QUANTITY: 96 pieces.
ON REQUEST:

- **Spacers:** Special bores, other colours.
- **Box quantity:** According to your request.

Return rollers

Part. 302 Spacer for chain profiles

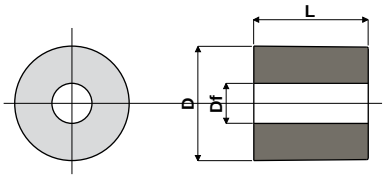

Df Bore diameter (mm)	D (mm)	L (mm)	Code
7	20	20	302 / 82797
7	20	27,5	302 / 82873

MATERIALS: Spacer made of reinforced polyamide black colour.
FEATURES: To be used as fixing spacer for chain profiles.
BOX QUANTITY: 96 pieces.
ON REQUEST:
- Spacers: With special bores and sizes.
- Box quantity: According to your request.

Example of application

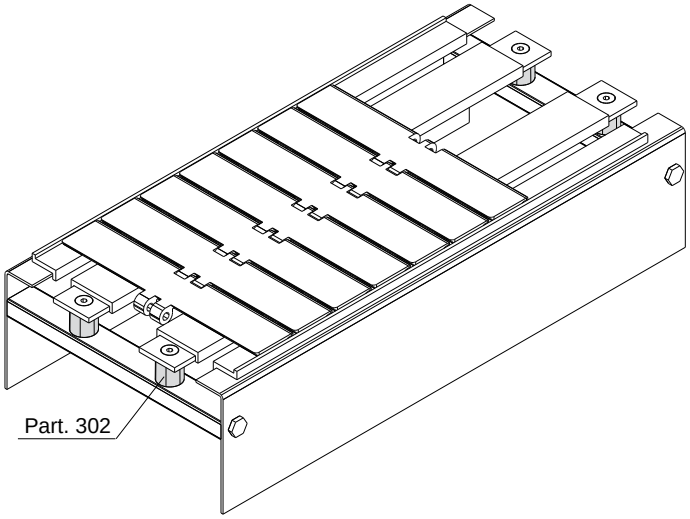

Part. 250 Roller for chain return (with flange)

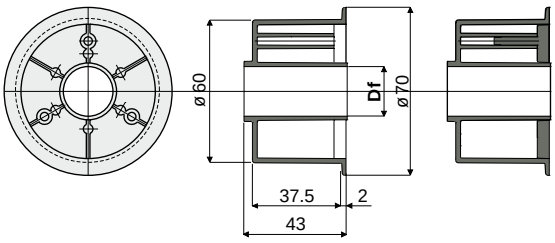

Without cap closure With cap closure

Df Bore for pin of (mm)	Without cap closure Code	With cap closure Code
15	250 / 82201	250 / 82219
16	250 / 82202	250 / 82220
18	250 / 82203	250 / 82221
20	250 / 82204	250 / 82222

MATERIALS: Roller made out of polyamide black colour; cap made out of polyamide grey colour.
FEATURES: To be assembled in the chain return.
BOX QUANTITY: 96 pieces.
ON REQUEST:
- Rollers: Special bores, other colours.
- Box quantity: According to your request.

Example of application

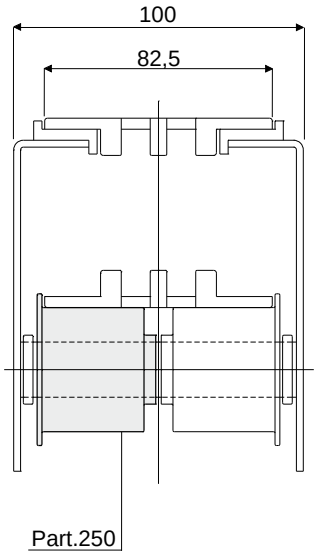

Return rollers

Example of application

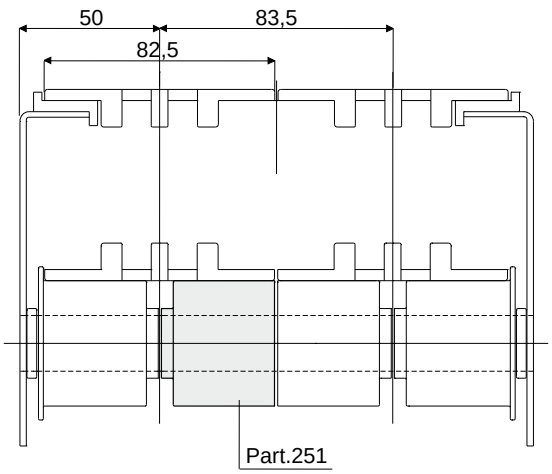

Roller for chain return (without flange) Part. 251

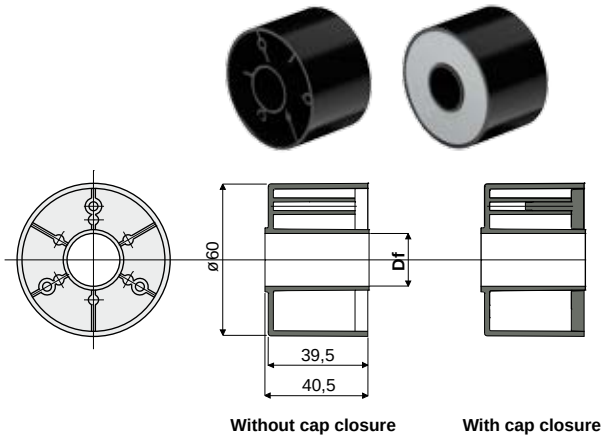

Df Bore for pin of (mm)	Without cap closure	With cap closure
	Code	Code
15	251 / 82205	251 / 82223
16	251 / 82206	251 / 82224
18	251 / 82207	251 / 82225
20	251 / 82208	251 / 82226

MATERIALS: Roller made out of polyamide black colour; cap made out of polyamide grey colour.
FEATURES: To be assembled in the chain return.
BOX QUANTITY: 96 pieces.
ON REQUEST:
- Rollers: Special bores, other colours.
- Box quantity: According to your request.

Example of application

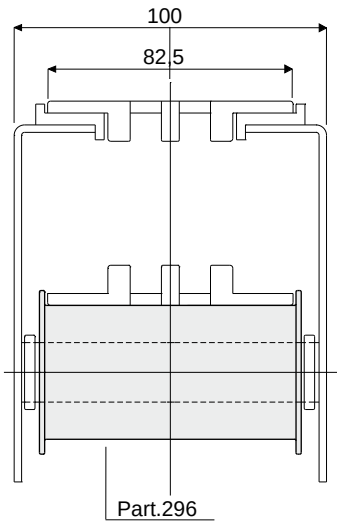

Roller for chain return (with double flange) Part. 296

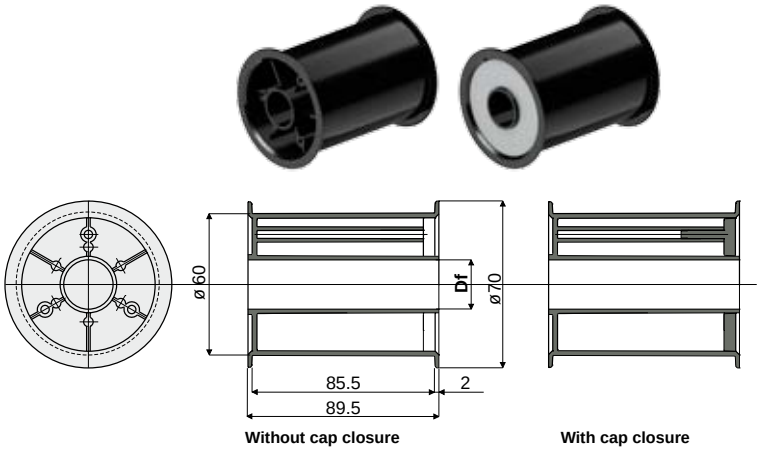

Df Bore for pin of (mm)	Without cap closure	With cap closure
	Code	Code
12	296 / 82611	296 / 82612
14	296 / 82613	296 / 82614
15	296 / 82615	296 / 82616
16	296 / 82617	296 / 82618
18	296 / 82619	296 / 82620
20	296 / 82621	296 / 82622

MATERIALS: Roller made out of polyamide black colour; cap made out of polyamide grey colour.
FEATURES: To be assembled in the chain return.
BOX QUANTITY: 48 pieces.
ON REQUEST:
- Rollers: Special bores, other colours.
- Box quantity: According to your request.

Return rollers

Part. 252 Roller for chain return
(with flange)

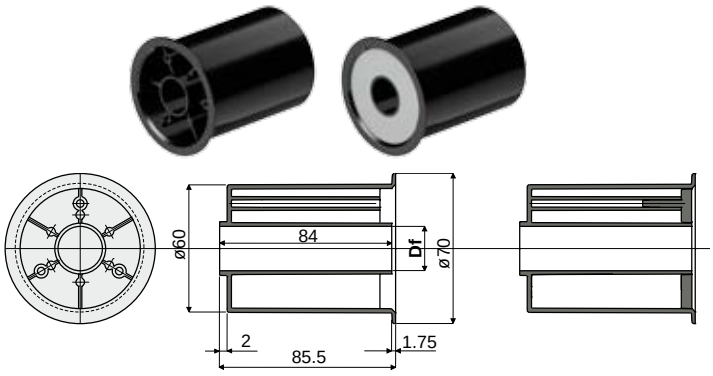

Without cap closure

With cap closure

Df Bore for pin of (mm)	Without cap closure	With cap closure
	Code	Code
12	252 / 82624	252 / 82625
14	252 / 82258	252 / 82259
15	252 / 82227	252 / 82231
16	252 / 82228	252 / 82232
18	252 / 82229	252 / 82233
20	252 / 82230	252 / 82234
25	252 / 83307	-
30	252 / 83309	-

MATERIALS: Roller made out of polyamide black colour; cap made out of polyamide grey colour.
FEATURES: To be assembled in the chain return.
BOX QUANTITY: 48 pieces.
ON REQUEST:
- Rollers: Special bores, other colours.
- Box quantity: According to your request.

Example of application

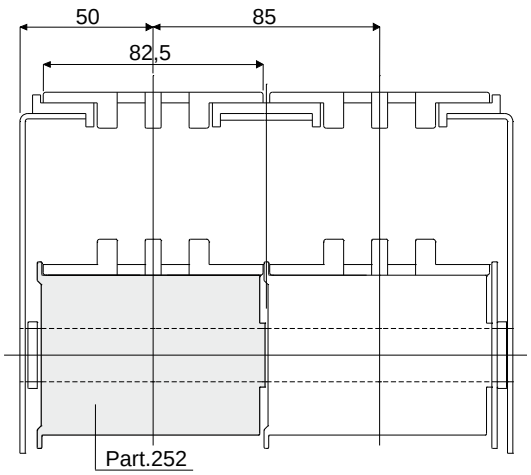

Part. 253 Roller for chain return
(without flange)

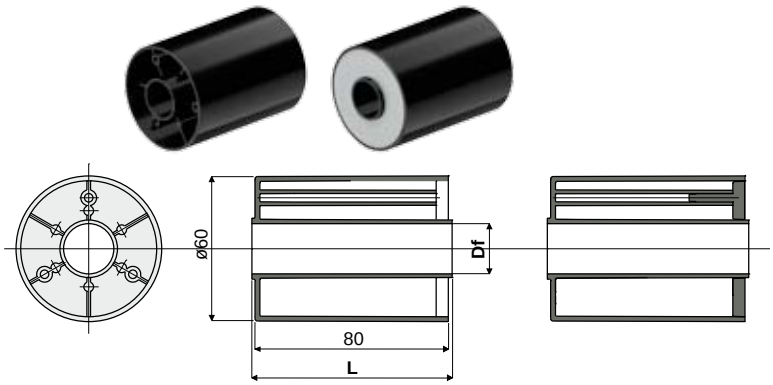

Without cap closure

With cap closure

Df Bore for pin of (mm)	Without cap closure		With cap closure	
	L = 82 mm	L = 84 mm	L = 82 mm	L = 84 mm
	Code	Code	Code	Code
12	253 / 82626	253 / 82627	253 / 82628	253 / 82629
14	253 / 82260	253 / 82261	253 / 82262	253 / 82263
15	253 / 82235	253 / 82239	253 / 82243	253 / 82247
16	253 / 82236	253 / 82240	253 / 82244	253 / 82248
18	253 / 82237	253 / 82241	253 / 82245	253 / 82249
20	253 / 82238	253 / 82242	253 / 82246	253 / 82250
25	-	253 / 83313	-	-
30	-	253 / 83314	-	-

MATERIALS: Roller made out of polyamide black colour; cap made out of polyamide grey colour.
FEATURES: To be assembled in the chain return.
BOX QUANTITY: 48 pieces.
ON REQUEST:
- Rollers: Special bores, other colours.
- Box quantity: According to your request.

Example of application

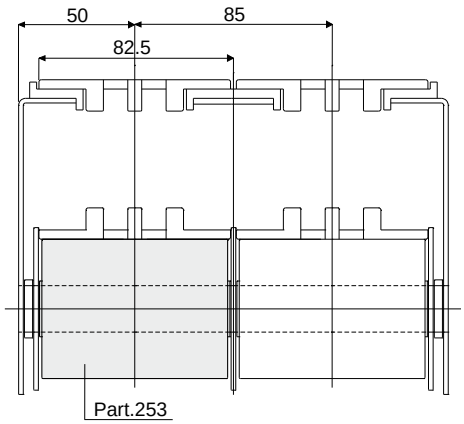

Return rollers

Example of application

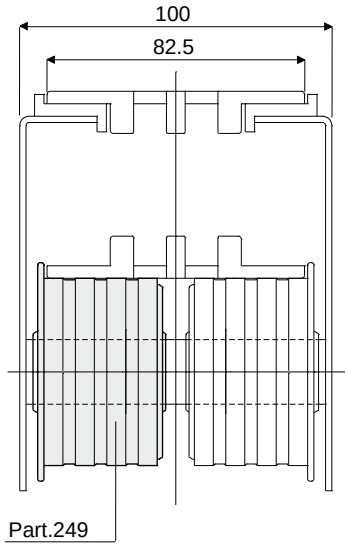

Roller with rubber for chain return (with flange) Part. 249

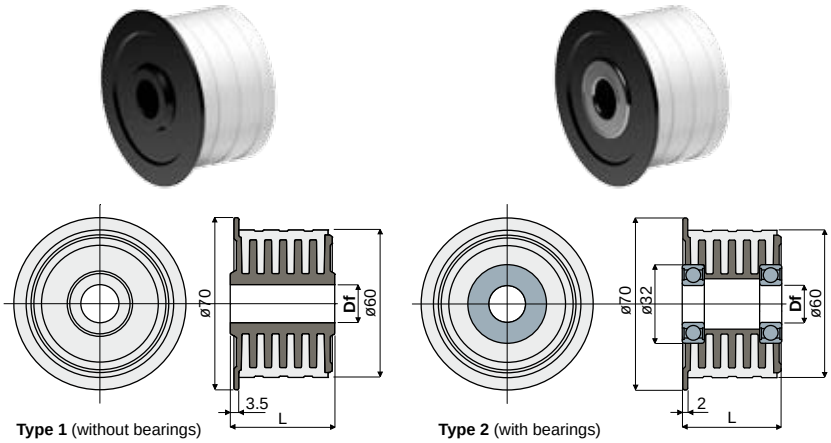

Df Bore for pin of (mm)	L (mm)	Type 1 (without bearings) Code
15	22	**249 / 85346** NEW
15	43	**249 / 82021**
16	22	**249 / 85347** NEW
16	43	**249 / 82022**
18	22	**249 / 85348** NEW
18	43	**249 / 82023**
20	22	**249 / 85349** NEW
20	43	**249 / 82024**

Df Bore for pin of (mm)	L (mm)	Type 2 (with bearings) Code	Type of bearing
15	40.5	**249 / 83642**	6002-ZZ

MATERIALS: Internal part is made of polyamide black colour; external rubber is made of thermoplastic rubber grey colour 65 Shore; bearing made of chrome steel.

FEATURES: This roller is completely closed, total lack of internal cavities to obtain the maximum level of cleanability and noiselessness during working operations.

BOX QUANTITY: 48 pieces.

ON REQUEST:

- **Rollers:** Special bores, other colours.
- **Box quantity:** According to your request.

Example of application

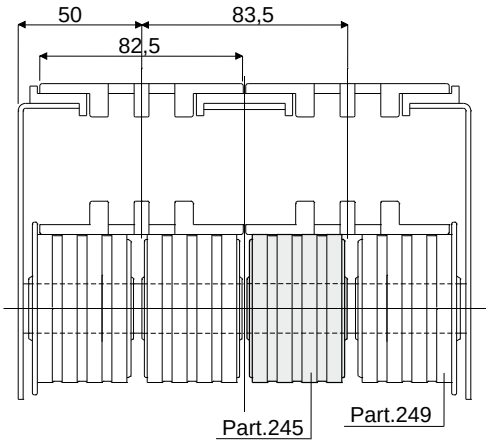

Roller with rubber for chain return (without flange) Part. 245

Df Bore for pin of (mm)	Code
12	**245 / 84180**
15	**245 / 82017**
16	**245 / 82018**
18	**245 / 82019**
20	**245 / 82020**

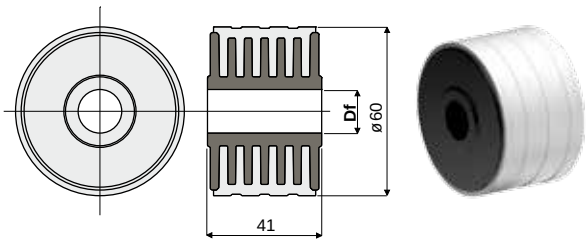

MATERIALS: Internal part is made of polyamide black colour; external rubber is made of thermoplastic rubber grey colour 65 Shore.

FEATURES: This roller is completely closed, total lack of internal cavities to obtain the maximum level of cleanability and noiselessness during working operations.

BOX QUANTITY: 48 pieces.

ON REQUEST:

- **Rollers:** Special bores, other colours.
- **Box quantity:** According to your request.

Example of application

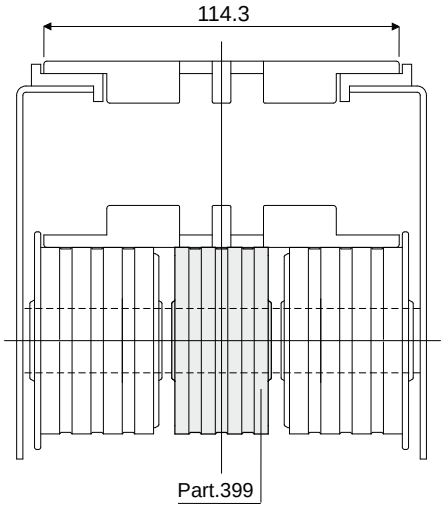

Roller with rubber for chain return (without flange) Part. 399

Df Bore for pin of (mm)	Code
12	**399 / 84304**
15	**399 / 84305**
16	**399 / 84306**
18	**399 / 84307**
20	**399 / 84308**

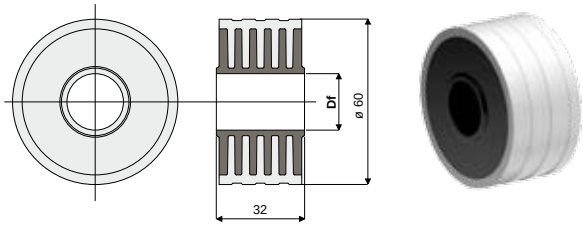

MATERIALS: Internal part is made of polyamide black colour; external rubber is made of thermoplastic rubber grey colour 65 Shore.

FEATURES: This roller is completely closed, total lack of internal cavities to obtain the maximum level of cleanability and noiselessness during working operations.

BOX QUANTITY: 48 pieces.

ON REQUEST:

- **Rollers:** Special bores, other colours.
- **Box quantity:** According to your request.

Return rollers

Part. 293 Roller with rubber for chain return
(without flange)

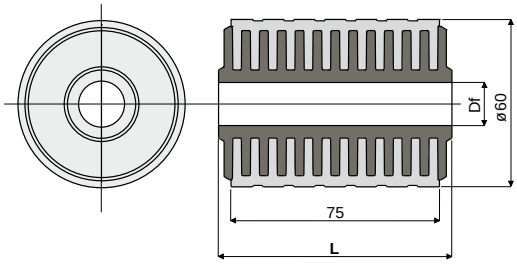

Df Bore for pin of (mm)	L = 82 mm Code	L = 84 mm Code
12	293 / 82789	293 / 82833
15	293 / 82580	293 / 82581
16	293 / 82582	293 / 82583
18	293 / 82584	293 / 82585
20	293 / 82586	293 / 82587

MATERIALS: Internal part is made of polyamide black colour; external rubber is made of thermoplastic rubber grey colour 65 Shore.
FEATURES: This roller is completely closed, total lack of internal cavities to obtain the maximum level of cleanability and noiselessness during working operations.
BOX QUANTITY: 48 pieces.
ON REQUEST:
- Rollers: Special bores, other colours.
- Box quantity: According to your request.

Example of application

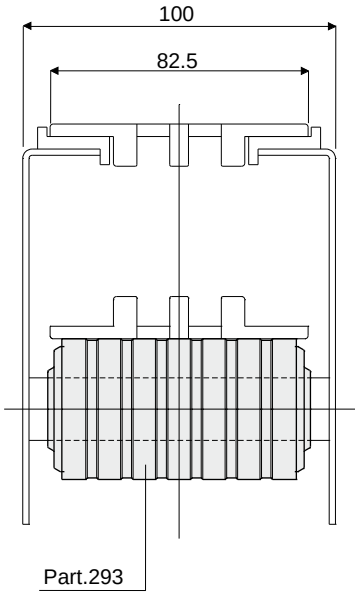

Part. 276 Roller with rubber for chain return
(without flange)

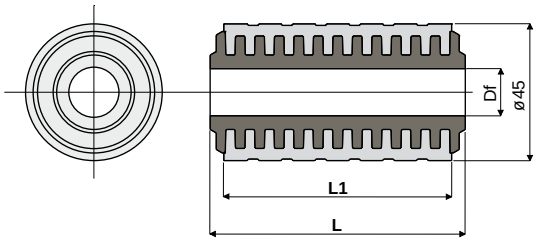

NEW

Df Bore for pin of (mm)	L = 41 mm L1 = 36 mm Code	L = 82 mm L1 = 75 mm Code	L = 84 mm L1 = 75 mm Code
12	276 / 85466	276 / 82853	276 / 82855
15	276 / 85462	276 / 82060	276 / 82061
16	276 / 85463	276 / 82062	276 / 82063
18	276 / 85464	276 / 82064	276 / 82065
20	276 / 85465	276 / 82066	276 / 82067

MATERIALS: Internal part is made of polyamide black colour; external rubber is made of thermoplastic rubber grey colour 65 Shore.
FEATURES: This roller is completely closed, total lack of internal cavities to obtain the maximum level of cleanability and noiselessness during working operations.
BOX QUANTITY: 48 pieces.
ON REQUEST:
- Rollers: Special bores, other colours.
- Box quantity: According to your request.

Example of application

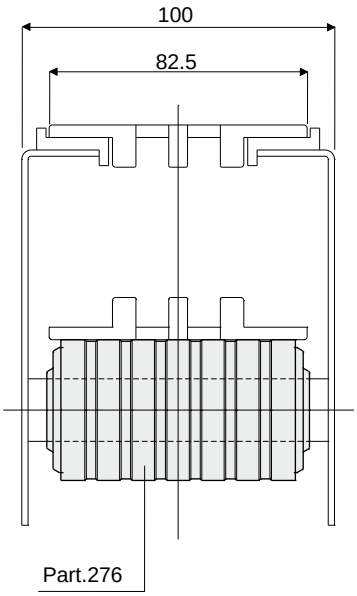

Return rollers

Flange for chain guide
(for roller Part. 251, 252, 253, 245, 293, 250, 249)

Part. **254**

Example of application

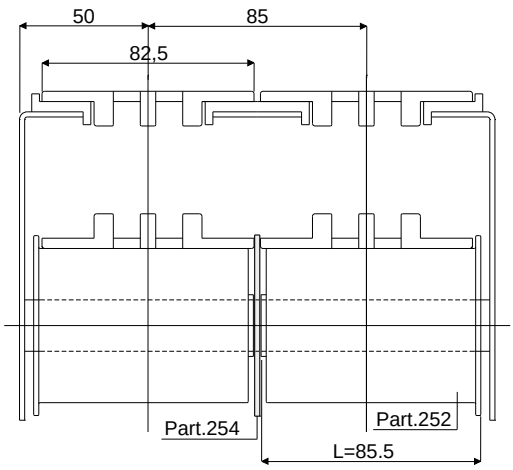

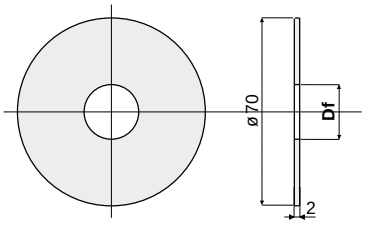

Df Bore for pin of (mm)	Code
12	254 / 82630
14	254 / 82264
15	254 / 82251
16	254 / 82252
18	254 / 82253
20	254 / 82254

MATERIALS: Flange is made of polypropylene black colour.
FEATURES: To be assembled to our roller for chain return Part.251, 252, 253, 245, 293, 250, 249.
BOX QUANTITY: 96 pieces.
ON REQUEST:
- Flanges: Special bores, other colours.
- Box quantity: According to your request.

Flange for chain guide
(for Part. 276, 271, 270)

Part. **282**

Example of application

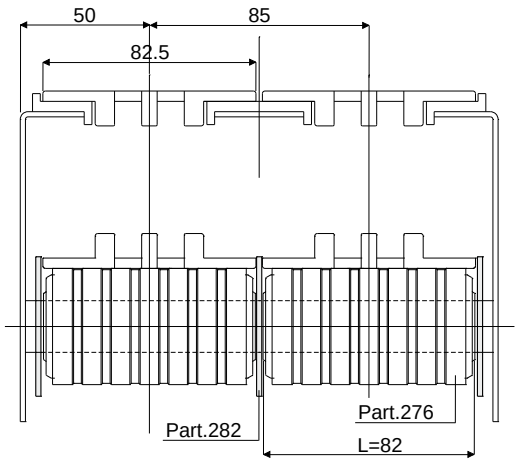

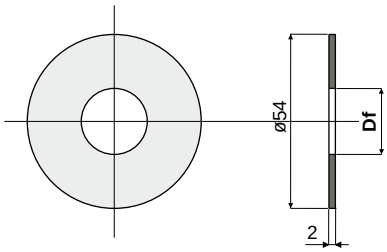

Df Bore for pin of (mm)	Code
15	282 / 82154
16	282 / 82155
18	282 / 82156
20	282 / 82157

MATERIALS: Flange is made of polypropylene black colour.
FEATURES: To be assembled to our roller for chain return Part.276, 271, 270.
BOX QUANTITY: 96 pieces.
ON REQUEST:
- Flanges: Special bores, other colours.
- Box quantity: According to your request.

Idler wheels

Part. 311 Split idler wheel 21 teeth
(for chains series 812-815-820-831)

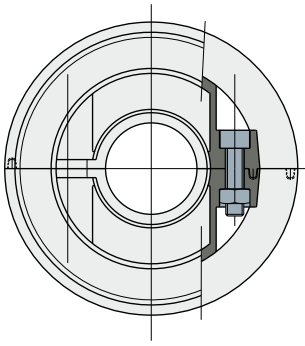

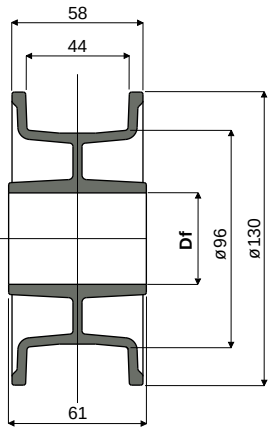

Df Bore for pin of (mm)	Code
25	311 / 82841
30	311 / 82842
35	311 / 82843
40	311 / 82844

MATERIALS: Wheel made of polyamide black colour; bolts and nuts made of stainless steel AISI 304.
FEATURES: Supplied assembled. To be used for chain return in the series 812, 815, 820, 831.
BOX QUANTITY: 12 pieces.
ON REQUEST:
- Wheels: With special bores, other colours.
- Box quantity: According to your request.

Part. 285 Split idler wheel 25 teeth
(for chains series 812-815-820-831)

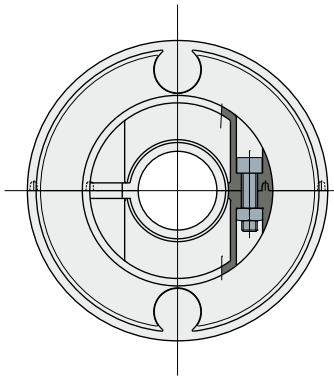

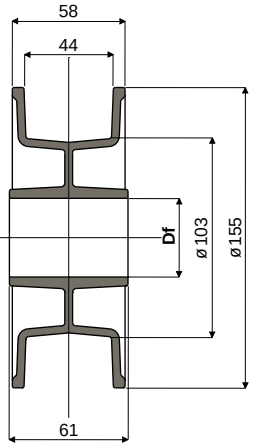

Df Bore for pin of (mm)	Code
25	285 / 82526
30	285 / 82528
35	285 / 82529
40	285 / 82530

MATERIALS: Wheel made of polyamide black colour; bolt and nuts made of stainless steel AISI 304.
FEATURES: Supplied assembled. To be used for chains Series 812, 815, 820, 831.
BOX QUANTITY: 12 pieces.
ON REQUEST:
- Wheels: With special bores, other colours, with customer brand.
- Box quantity: According to your request.

Idler wheels

Split idler wheel 10 teeth
(for chains series 879 Tab, 880 Tab and 881 Tab)

Part. **310**

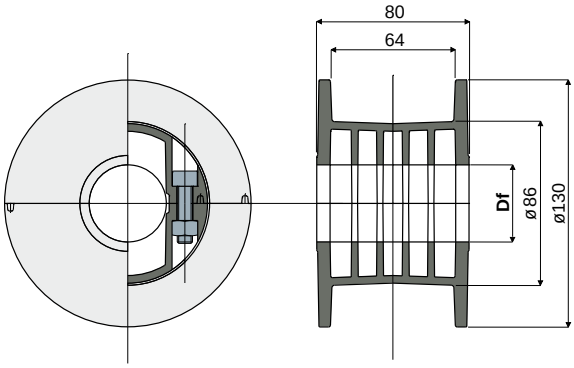

Df Bore for pin of (mm)	Code
20	310 / 82827
25	310 / 82828
30	310 / 82829
35	310 / 82830
40	310 / 82831

MATERIALS: Wheel made of polyamide black colour; bolts and nuts made of stainless steel AISI 304.
FEATURES: Supplied assembled. To be used for chain return in series 879 Tab, 880 Tab and 881 Tab.
BOX QUANTITY: 12 pieces.
ON REQUEST:
- **Wheels:** With special bores, other colours.
- **Box quantity:** According to your request.

Idler wheel for chain return

Part. **268**

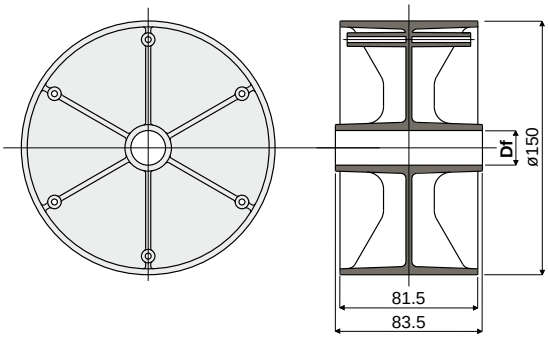

Df Bore for pin of (mm)	Code
20	268 / 82040

MATERIALS: Wheel in polyamide black colour.
FEATURES: To be assembled in the chain return near to the sprocket.
BOX QUANTITY: 12 pieces.
ON REQUEST:
- **Wheels:** Other bore sizes, materials and colours.
- **Box quantity:** According to your request.

Flange for chain guide
(for idler wheel Part. 268)

Part. **269**

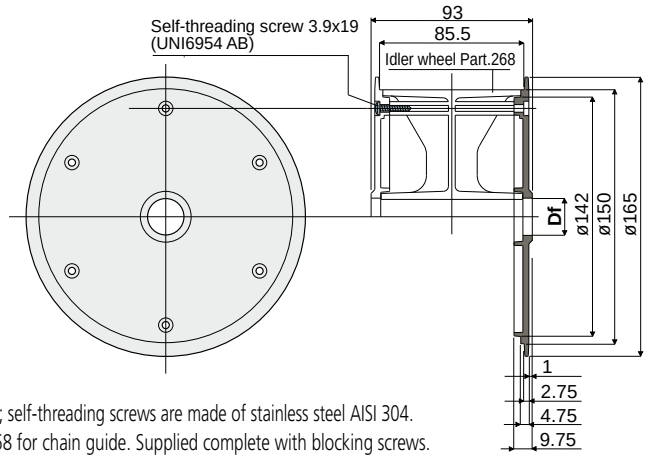

Df Bore for pin of (mm)	Code
20	269 / 82041

MATERIALS: Flange is made of polyamide black colour; self-threading screws are made of stainless steel AISI 304.
FEATURES: To be assembled to our idler wheel Part.268 for chain guide. Supplied complete with blocking screws.
BOX QUANTITY: 24 pieces.
ON REQUEST:
- **Flanges:** Other bore sizes, materials and colours.
- **Box quantity:** According to your request.

Idler wheels

Part. 455 Split idler wheel 10 teeth

(for chains series 879, 879 Tab, 880, 880 Tab)

NEW

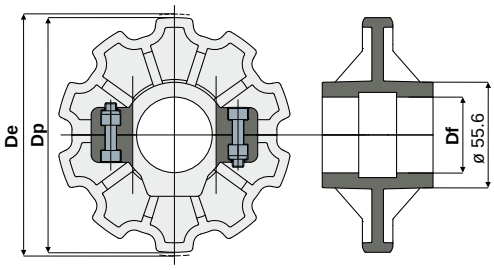

Df (mm)	Dp (mm)	De (mm)	Code
25	123.3	122.5	455 / 85420
30	123.3	122.5	455 / 85421
35	123.3	122.5	455 / 85422
40	123.3	122.5	455 / 85423

MATERIALS: Wheel made of polyamide black colour; bolts and nuts made of stainless steel AISI 304.
BOX QUANTITY: 8 pieces.
ON REQUEST:
- Wheels: In other materials.
- Box quantity: According to your request.

Part. 454 Split sprocket 10 teeth

(for chains series 879, 879 Tab, 880, 880 Tab)

NEW

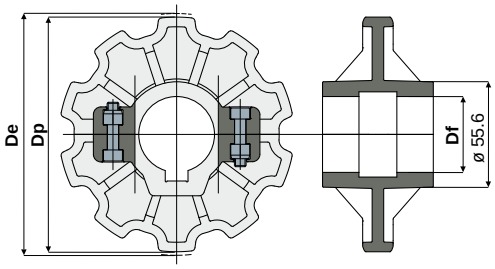

Df (mm)	Dp (mm)	De (mm)	Code
25	123.3	122.5	454 / 85416
30	123.3	122.5	454 / 85417
35	123.3	122.5	454 / 85418
40	123.3	122.5	454 / 85419

MATERIALS: Wheel made of reinforced polyamide black colour; bolts and nuts made of stainless steel AISI 304.
BOX QUANTITY: 8 pieces.
ON REQUEST:
- Wheels: In other materials.
- Box quantity: According to your request.

Part. 457 Split idler wheel 12 teeth

(for chains series 879, 879 Tab, 880, 880 Tab)

NEW

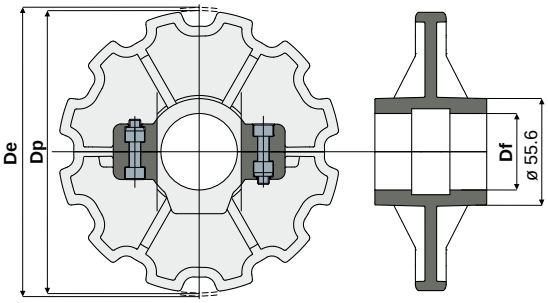

Df (mm)	Dp (mm)	De (mm)	Code
25	147.2	147.4	457 / 85428
30	147.2	147.4	457 / 85429
35	147.2	147.4	457 / 85430
40	147.2	147.4	457 / 85431

MATERIALS: Wheel made of polyamide black colour; bolts and nuts made of stainless steel AISI 304.
BOX QUANTITY: 8 pieces.
ON REQUEST:
- Wheels: In other materials.
- Box quantity: According to your request.

Example of application

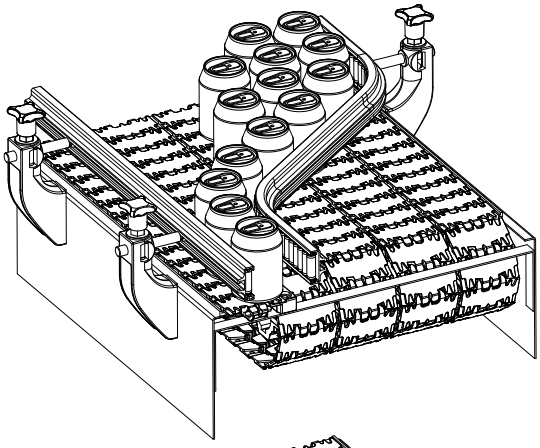

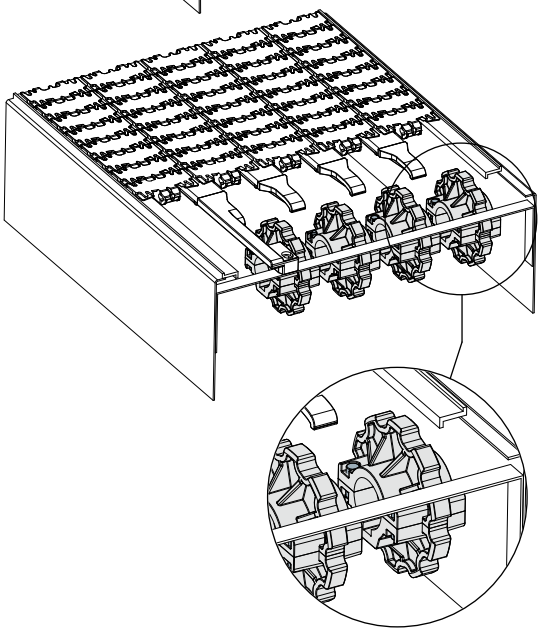

Idler wheels

Split sprocket 12 teeth

(for chains series 879, 879 Tab, 880, 880 Tab)

Part. **456**

NEW

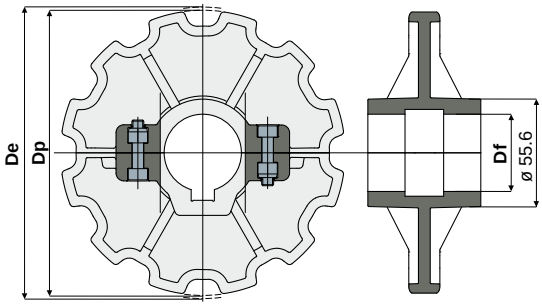

Df (mm)	Dp (mm)	De (mm)	Code
25	147.2	147.4	**456 / 85424**
30	147.2	147.4	**456 / 85425**
35	147.2	147.4	**456 / 85426**
40	147.2	147.4	**456 / 85427**

MATERIALS: Wheel made of reinforced polyamide black colour; bolts and nuts made of stainless steel AISI 304.
BOX QUANTITY: 8 pieces.
ON REQUEST:
- **Wheels:** In other materials.
- **Box quantity:** According to your request.

Corner disc 32 teeth

(for chains series 879BO, 879BO Tab, 880BO, 880BO Tab)

Part. **458**

NEW

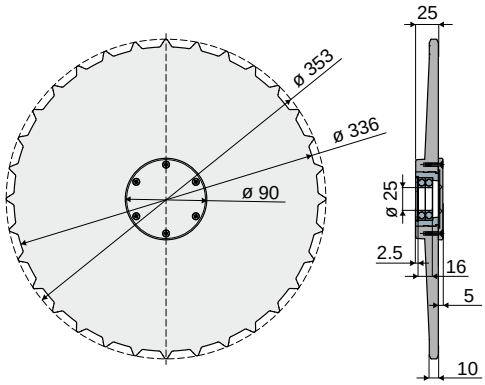

Code
458 / 85435

MATERIALS: Wheel and external cap made of reinforced polyamide black colour; bushing in brass; stop ring and self-threading screws in stainless steel AISI 304; bearing type 16005 25x47x8 in chrome steel.
BOX QUANTITY: 8 pieces.
ON REQUEST:
- **Wheels:** In other materials.
- **Box quantity:** According to your request.

Corner disc 32 teeth

(for chains series 879BO, 879BO Tab, 880BO, 880BO Tab)

Part. **459**

NEW

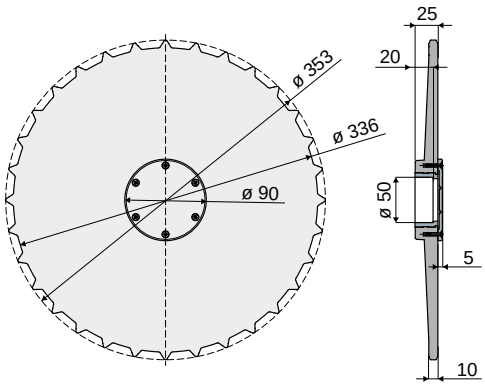

Code
459 / 85436

MATERIALS: Wheel and external cap made of reinforced polyamide black colour; bushing in brass; self-threading screws in stainless steel AISI 304.
BOX QUANTITY: 8 pieces.
ON REQUEST:
- **Wheels:** In other materials.
- **Box quantity:** According to your request.

Example of application

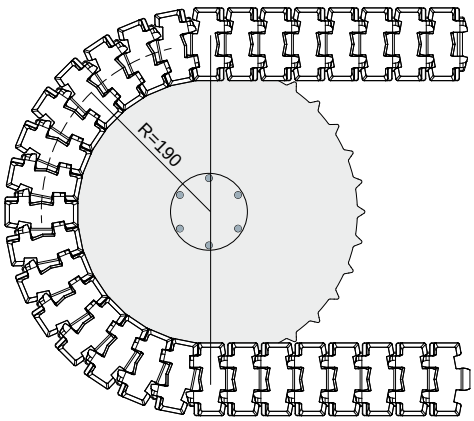

Bearing supports

Part. 300 Bearing-holder flange

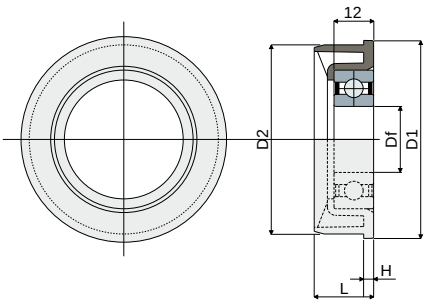

Tube dimensions							Bore for pin	Code	Bearing type
Outside ø	Thickness	Inside ø	D1	D2	H	L	Df		
(mm)	(mm)	(mm)	(mm)	(mm)	(mm)	(mm)	(mm)		
60	1,5	57.3	60	57.3	3	18	20	**300 / 84814**	6004/2RS
60	1,5	57.3	60	57.3	3	18	20	**300 / 82682**	Supplied without bearings
50	1,5	47	50	47.3	3	18	20	**300 / 86727**	6004/2RS
50	1,5	47	50	47.3	3	18	20	**300 / 86728**	Supplied without bearings

NEW

MATERIALS: Flange is made of polyamide black colour.
FEATURES: To be inserted in the tube sides D=60,3 thickness 1,5 mm to build a roller conveyor or rollers for chain return.
BOX QUANTITY: 24 pieces.
ON REQUEST:
- **Flanges:** Supplied assembled with bearings.
- **Box quantity:** According to your request.

Part. 317 Bearing support for conveyor rollers
(with protective shield)

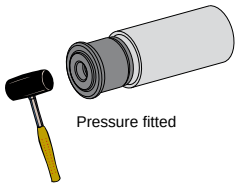

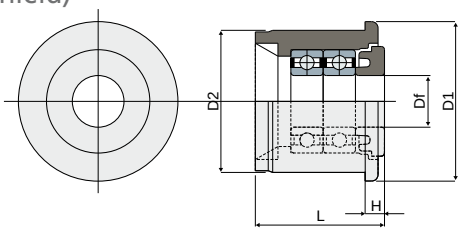

Tube dimensions							Bore for pin	Code	Bearing type
Outside ø	Thickness	Inside ø	D1	D2	H	L	Df		
(mm)	(mm)	(mm)	(mm)	(mm)	(mm)	(mm)	(mm)		
25	1,5	22	25	22	3	20	8	**317 / 82911**	688/8-2RS
25	1,5	22	25	22	3	20	8	**317 / 82912**	Supplied without bearings

MATERIALS: Bearing support with internal part and external bushing made of polyamide black colour; bearing made of chrome steel.
FEATURES: To be inserted in the tube sides to build a roller conveyor.
BOX QUANTITY: 24 pieces.
ON REQUEST:
- **Bearing supports:** Other colours.
- **Box quantity:** According to your request.

Part. 263 Bearing support for conveyor rollers
(for idler roller)

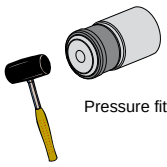

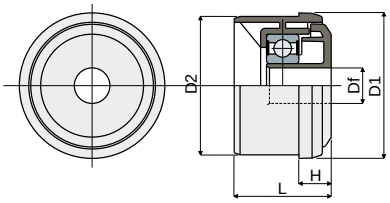

Tube dimensions							Bore for pin	Code	Bearing type
Outside ø	Thickness	Inside ø	D1	D2	H	L	Df		
(mm)	(mm)	(mm)	(mm)	(mm)	(mm)	(mm)	(mm)		
50	1,5	47	50	47	11	30	12	**263 / 82032**	6202-2RS
50	1,5	47	50	47	11	30	14	**263 / 82256**	6202-2RS
60	1,5	57	60	57	15	53	12	**263 / 85071**	6202-2RS
60	1,5	57	60	57	15	53	14	**263 / 85068**	6202-2RS
60	2,0	56	60	56	15	53	12	**263 / 85072**	6202-2RS
60	2,0	56	60	56	15	53	14	**263 / 85069**	6202-2RS
60	2,75	54,5	60	54,5	15	53	12	**263 / 85073**	6202-2RS
60	2,75	54,5	60	54,5	15	53	14	**263 / 85070**	6202-2RS

MATERIALS: Bearing support with protective shield made of polyamide grey colour; external bushing made of polyamide black colour; bearing made of chrome steel.
FEATURES: To be inserted in the tube sides to build a roller conveyor.
BOX QUANTITY: 24 pieces.
ON REQUEST:
- **Bearing supports:** Other colours, bores with different sizes.
- **Box quantity:** According to your request.

Example of assembly

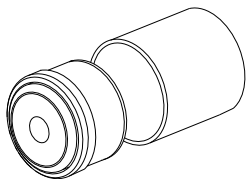

Bearing supports

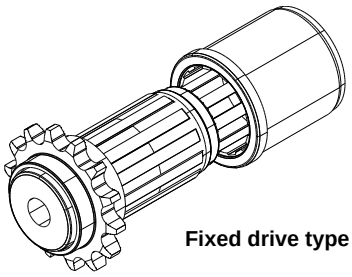

Fixed drive type

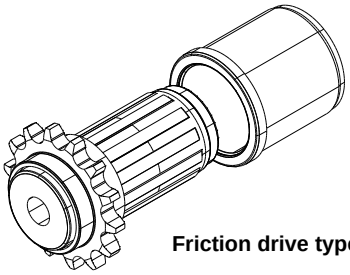

Friction drive type

Bearing support for conveyor rollers
(for drive roller)

Part. **264**

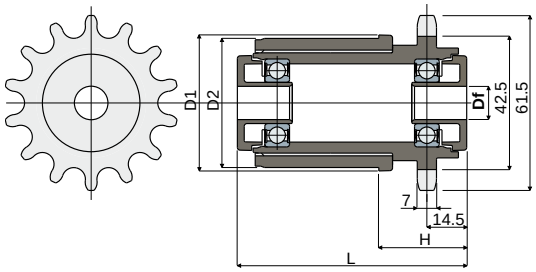

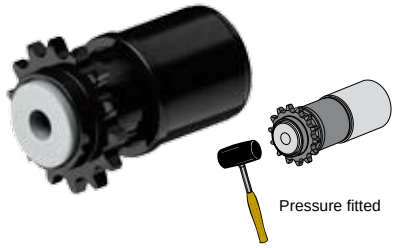

Tube dimensions							Bore for pin	Fixed drive type	Friction drive type	Bearing type
Outside ø (mm)	Thickness (mm)	Inside ø (mm)	D1 (mm)	D2 (mm)	H (mm)	L (mm)	Df (mm)	Code	Code	
50	1,5	47	50	47	32	83	12	**264 / 82033**	**264 / 82217**	6002-2RS
50	1,5	47	50	47	32	83	14	**264 / 82215**	**264 / 82218**	6002-2RS
60	1,5	57	60	57	39	83	12	**264 / 85074**	**264 / 84244**	6002-2RS
60	1,5	57	60	57	39	83	14	**264 / 85075**	**264 / 84245**	6002-2RS
60	2,0	56	60	56	39	83	12	**264 / 85076**	**264 / 84246**	6002-2RS
60	2,0	56	60	56	39	83	14	**264 / 85077**	**264 / 84247**	6002-2RS
60	2,75	54,5	60	54,5	39	83	12	**264 / 85078**	**264 / 84251**	6002-2RS
60	2,75	54,5	60	54,5	39	83	14	**264 / 85079**	**264 / 84253**	6002-2RS

MATERIALS: Bearing support with protective shield made of polyamide grey colour; external bushing made of polyamide black colour; bearing made of chrome steel.

FEATURES: To be inserted in the tube sides to build a roller conveyor. Drive sprocket with 14 teeth for roller chain type DIN 8187-08-b1.

BOX QUANTITY: 24 pieces.

ON REQUEST:

- **Bearing supports:** other colours, bores with different sizes.
- **Box quantity:** According to your request.

Roller chain type DIN 8187 tipo 08-B1

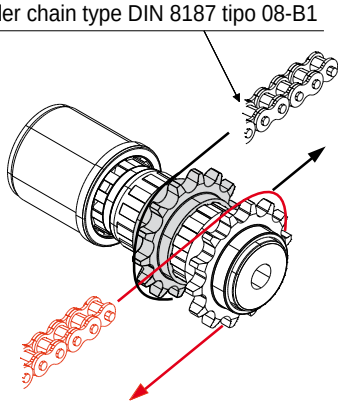

Example of assembly

14 teeth sprocket
(for bearing support Part. 264)

Part. **265**

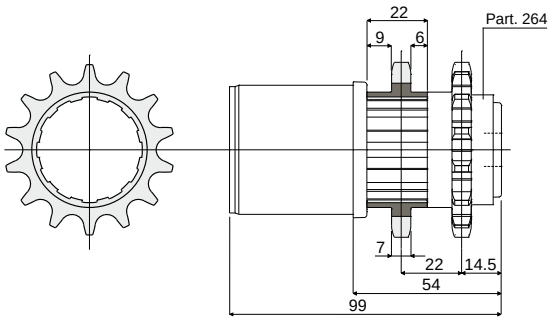

Code
265 / 82034

MATERIALS: Drive sprocket is made of polyamide black colour.

FEATURES: Accessory to be used with bearing support Part.264 to make the drive roller to roller. This drive type allows a greater torque.

BOX QUANTITY: 24 pieces.

ON REQUEST:

- **Sprockets:** other colours.
- **Box quantity:** According to your request.

Bushings

Part. 336 Threaded bushings
(for conveyor flanks)

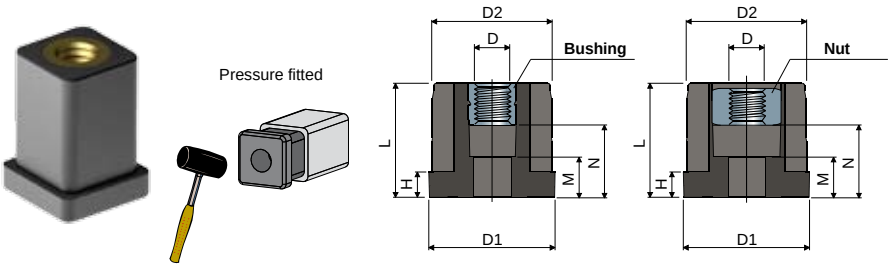

Example of application

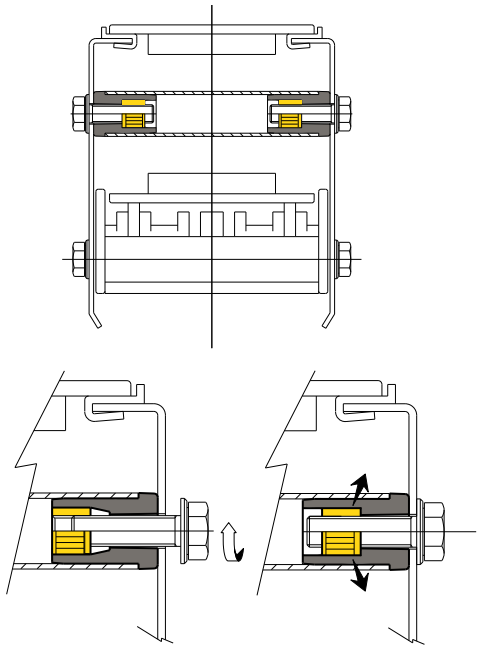

Tube dimensions										With bushing
Outside (mm)	Thickness (mm)	Inside (mm)	Thread D	D1 (mm)	D2 (mm)	H (mm)	L (mm)	M (mm)	N (mm)	Code
20x20	1,5	17x17	M8	20x20	17x17	5	28	13	18	**336 / 83138**

Tube dimensions										With nut
Outside (mm)	Thickness (mm)	Inside (mm)	Thread D	D1 (mm)	D2 (mm)	H (mm)	L (mm)	M (mm)	N (mm)	Code
20x20	1,5	17x17	M8	20x20	17x17	5	28	13	18	**336 / 84563**

MATERIALS: Bushing in reinforced polyamide black colour; threaded insert or nut in brass.
FEATURES: Supplied assembled. To be assembled in the conveyor flanks.
BOX QUANTITY: 48 pieces.
ON REQUEST:
- **Bushes:** Special thickness tube.
- **Box quantity:** According to your request.

Part. 335 Threaded bushings
(for conveyor flanks)

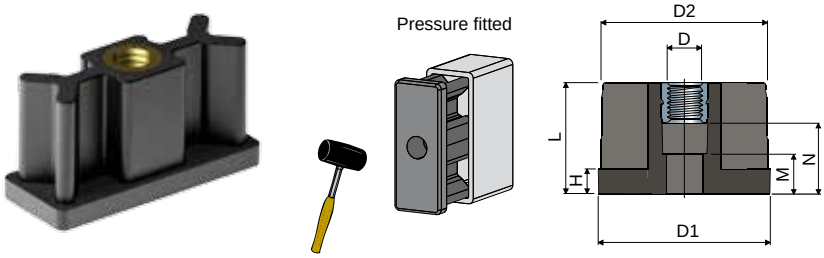

Example of application

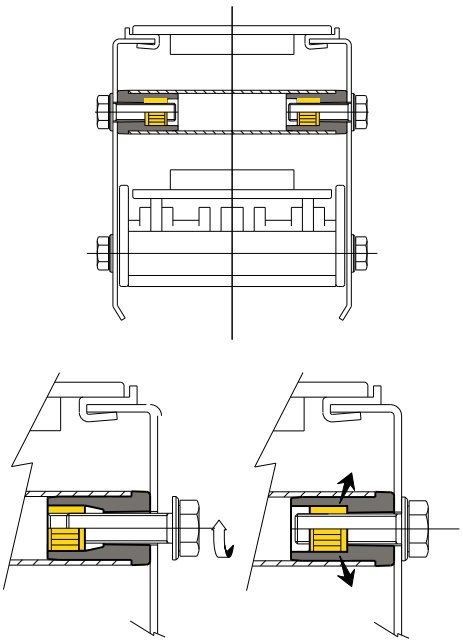

Tube dimensions										Code
Outside (mm)	Thickness (mm)	Inside (mm)	Thread D	D1 (mm)	D2 (mm)	H (mm)	L (mm)	M (mm)	N (mm)	
20x50	2	16x46	M8	20x50	16x46	5	28	13	18	**335 / 83128**

MATERIALS: Bush in reinforced polyamide black colour; threaded insert in brass.
FEATURES: Supplied assembled. To be assembled in the conveyor flanks.
BOX QUANTITY: 48 pieces.
ON REQUEST:
- **Bushes:** Special thickness tube.
- **Box quantity:** According to your request.

Bushings

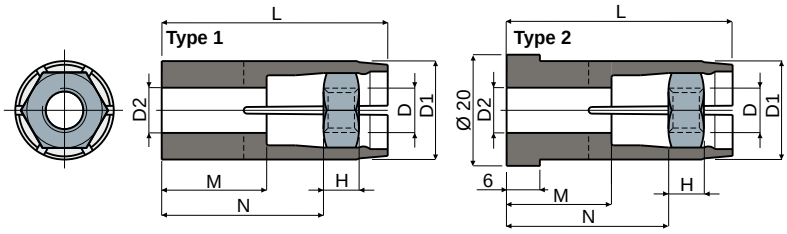

Expansion plugs
(for round tubes)

Part. **283**

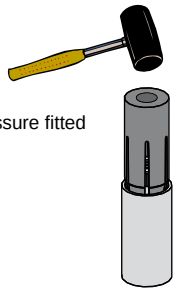

Example of application

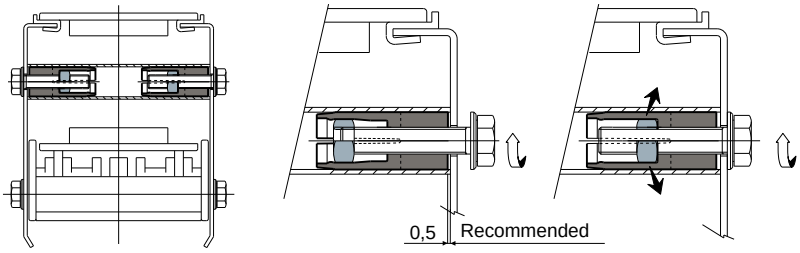

Tube dimensions										Type 1
Outside (mm)	Thickness (mm)	Inside (mm)	D (mm)	D1 (mm)	D2 (mm)	H (mm)	L (mm)	M (mm)	N (mm)	Code
20	1,5	17	M8	17	8,5	6,5	40	18	28	**283 / 82579**
25	1,5	22	M10	22	10,5	8	51	23	36	**283 / 82505**

Tube dimensions										Type 2
Outside (mm)	Thickness (mm)	Inside (mm)	D (mm)	D1 (mm)	D2 (mm)	H (mm)	L (mm)	M (mm)	N (mm)	Code
20	1,5	17	M8	17	8,5	6,5	40	19	29	**283 / 82664**
25	1,5	22	M8	22	8,5	6,5	51	23	36	**283 / 84865**

MATERIALS: Plug made of reinforced polyamide black colour; nut made of stainless steel AISI 304.
FEATURES: Supplied assembled. To be assembled in the conveyor flanks.
BOX QUANTITY: 48 pieces.
ON REQUEST:
- **Plugs:** Special thickness tube.
- **Box quantity:** According to your request.

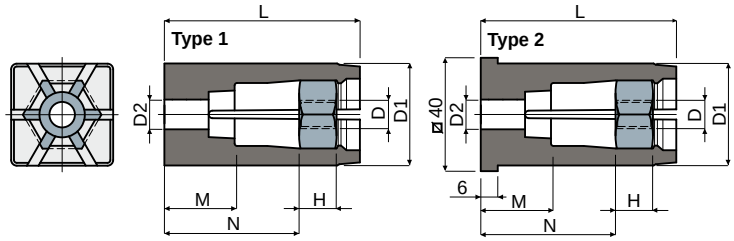

Expansion plugs
(for square tubes)

Part. **414**

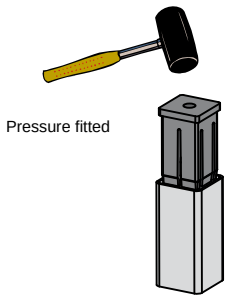

Example of application

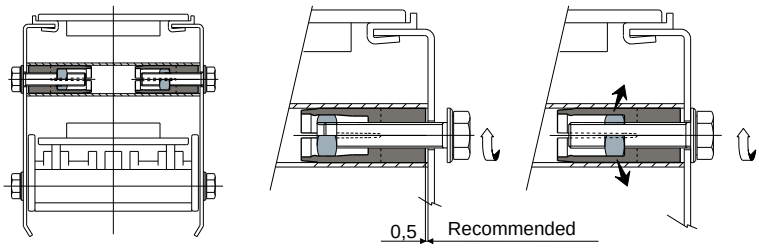

Tube dimensions										Type 1
Outside (mm)	Thickness (mm)	Inside (mm)	D (mm)	D1 (mm)	D2 (mm)	H (mm)	L (mm)	M (mm)	N (mm)	Code
40x40	2	36x36	M8	36	10,5	13	69	24,8	47,5	**414 / 84868**
40x40	2	36x36	M10	36	10,5	13	69	24,8	47,5	**414 / 85096**

Tube dimensions										Type 2
Outside (mm)	Thickness (mm)	Inside (mm)	D (mm)	D1 (mm)	D2 (mm)	H (mm)	L (mm)	M (mm)	N (mm)	Code
40x40	2	36x36	M8	36	10,5	13	69	24,8	47,5	**414 / 84545**
40x40	2	36x36	M10	36	10,5	13	69	24,8	47,5	**414 / 84546**

MATERIALS: Plug made of reinforced polyamide black colour; nut made of stainless steel AISI 304.
FEATURES: Supplied assembled. To be assembled in the conveyor flanks.
BOX QUANTITY: 48 pieces.
ON REQUEST:
- **Plugs:** Special thickness tube.
- **Box quantity:** According to your request.

Hinges

Part. 233 Hinge

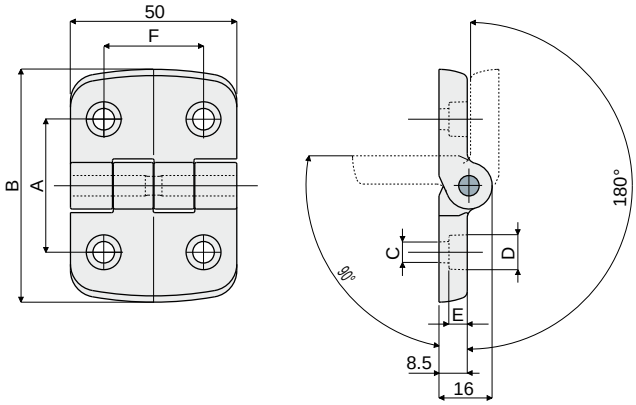

A (mm)	B (mm)	C (mm)	D (mm)	E (mm)	F (mm)	Code
34	50	5,5	10,5	3,5	34	**233 / 80970**
31	50	5,5	9	5	30	**233 / 80772**
40	70	6,5	10,5	6	30	**233 / 80773**
46	70	6,5	10,5	6	30	**233 / 80774**
46	70	8,5	13,5	5	30	**233 / 80775**

MATERIALS: Hinge made of reinforced polyamide black colour; pin made of stainless steel AISI 304.
FEATURES: Maximum rotation 270°
BOX QUANTITY: 24 pieces.
ON REQUEST:

- **Hinges:** In reinforced polypropylene, other colours.
- **Box quantity:** According to your request.

Part. 234 Hinge

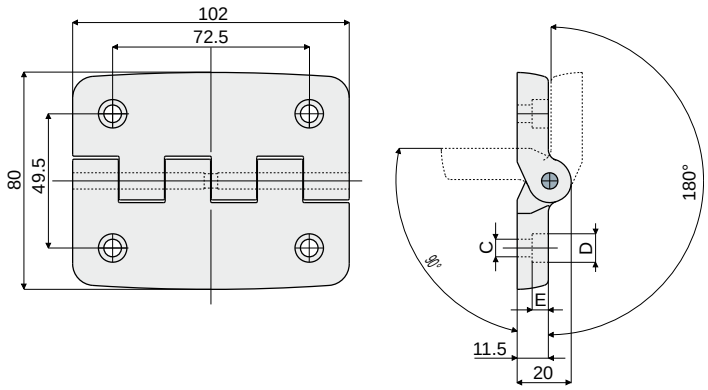

C (mm)	D (mm)	E (mm)	Code
6,5	10,5	6	**234 / 80776**
8,5	13,5	8	**234 / 80777**

MATERIALS: Hinge made of reinforced polyamide black colour; pin made of stainless steel AISI 304.
FEATURES: Maximum rotation 270°
BOX QUANTITY: 24 pieces.
ON REQUEST:

- **Hinges:** In reinforced polypropylene, other colours.
- **Box quantity:** According to your request.

Split shaft collars

Split shaft collars Part. 288

Example of applications

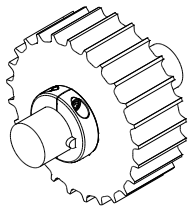

Sprockets

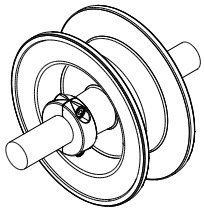

Idler wheels

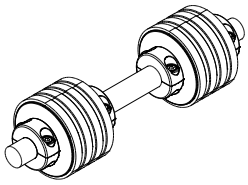

Rollers for chain return

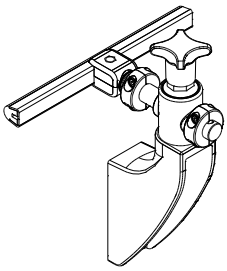

Guide rail bracket

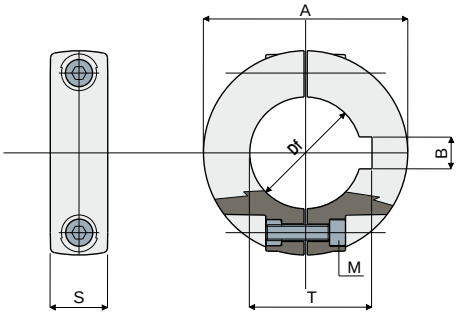

With Keyway

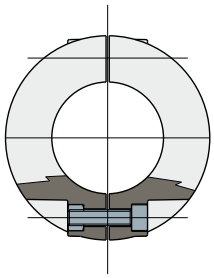

Without Keyway

With keyway						
Df (mm)	A (mm)	S (mm)	M (mm)	B (mm)	T (mm)	Code
20	40	14	M4	6	22,8	**288 / 82555**
25	50	14	M5	8	28,3	**288 / 82556**
30	50	14	M5	8	33,3	**288 / 82557**
35	65	14	M5	10	38,3	**288 / 82558**
40	65	14	M5	12	43,3	**288 / 82559**

Without keyway				
Df (mm)	A (mm)	S (mm)	M (mm)	Code
12	35	13	M4	**288 / 82560**
14	35	13	M4	**288 / 82561**
16	35	13	M4	**288 / 82562**
18	40	14	M4	**288 / 82563**
20	40	14	M4	**288 / 82564**
25	50	14	M5	**288 / 82565**
30	50	14	M5	**288 / 82566**
35	65	14	M5	**288 / 82567**
40	65	14	M5	**288 / 82568**

MATERIALS: Collars made out of reinforced polyamide black colour; bolt and nuts made out of stainless steel AISI 304.
FEATURES: Supplied assembled. To be assembled on the shaft to obtain wheels axial blocking; to be assembled on pins for guides supporting to adjust the position of guides according to the bottle size.
BOX QUANTITY: 96 pieces.
ON REQUEST:

- **Collars:** With special bores, other colours.
- **Box quantity:** According to your request.

Split shaft collar Part. 376

(with square bore 40x40 mm - 60x60 mm)

Example of application

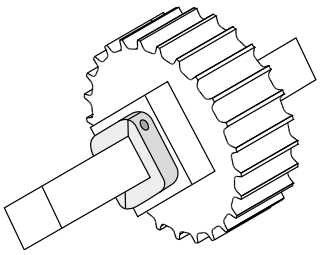

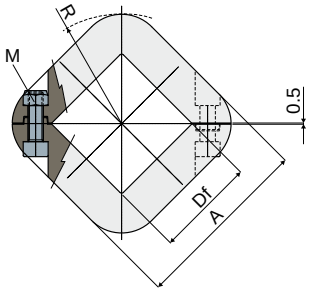

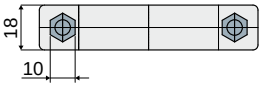

M (mm)	Df (mm)	A (mm)	R (mm)	Code
M6	40	72	44	**376 / 83895**
M6	60	92	58	**376 / 85067**

MATERIALS: Collars made out of reinforced polyamide black colour; self-locking nuts and screws made of stainless steel AISI 304.
FEATURES: To be assembled on the shaft to obtain wheels axial blocking.
BOX QUANTITY: 96 pieces.
ON REQUEST:

- **Box quantity:** According to your request.

Modular transfer plates

Part. 257 Modular transfer plates with lip
(width 115 mm 5 rows of rollers)

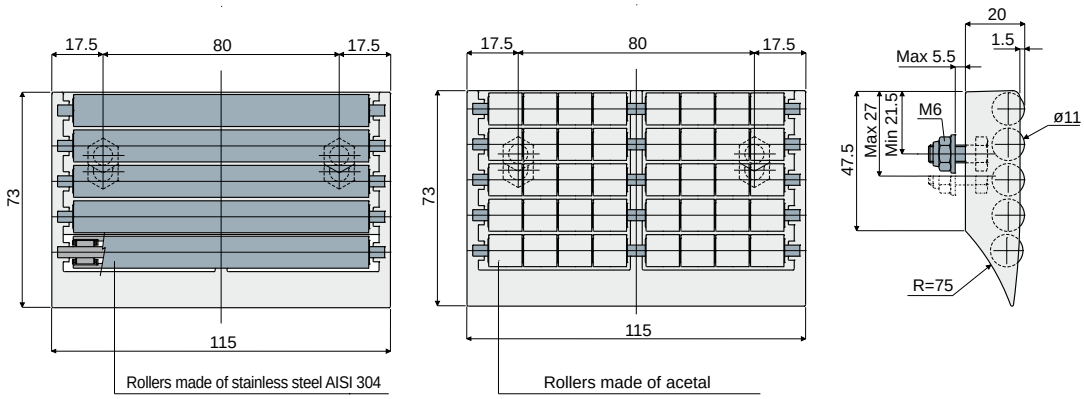

Rollers made of acetal	Rollers made of stainless steel AISI 304
Code	Code
257 / 82005	257 / 85004

MATERIALS: Modular transfer plate with external module made of acetal grey colour; rollers made of grey acetal or stainless steel AISI 304; pins and fixing nuts are made of stainless steel AISI 304.
FEATURES: To be assembled at the end of your conveyor to help the products transfer. Easy to assemble, low friction coefficient, minimum noise level, extremely cleanable.
BOX QUANTITY: 8 pieces.
ON REQUEST:
- **External module and rollers:** Can be produced in other colours.
- **Box quantity:** According to your request.

Part. 417 Modular transfer plates with lip
(width 115 mm 4 rows of rollers)

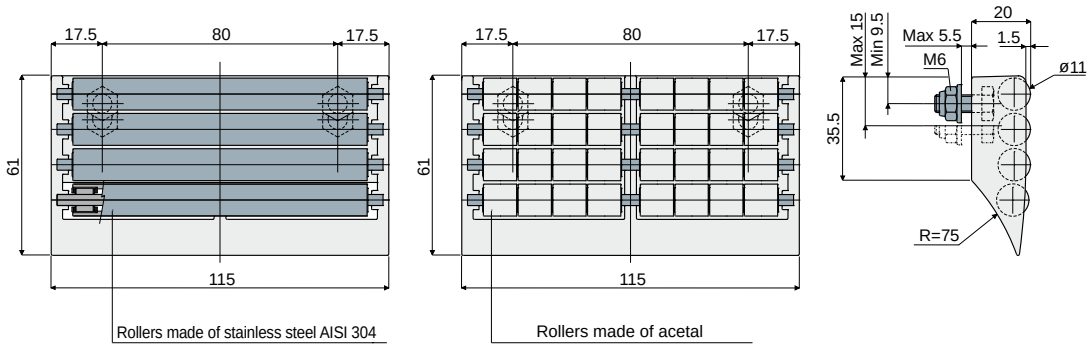

Rollers made of acetal	Rollers made of stainless steel AISI 304
Code	Code
417 / 84576	417 / 85031

MATERIALS: Modular transfer plate with external module made of acetal grey colour; rollers made of grey acetal or stainless steel AISI 304; pins and fixing nuts are made of stainless steel AISI 304.
FEATURES: To be assembled at the end of your conveyor to help the products transfer. Easy to assemble, low friction coefficient, minimum noise level, extremely cleanable.
BOX QUANTITY: 8 pieces.
ON REQUEST:
- **External module and rollers:** Can be produced in other colours.
- **Box quantity:** According to your request.

Modular transfer plates

Modular transfer plates with lip
(width 115 mm 3 rows of rollers)

Part. **258**

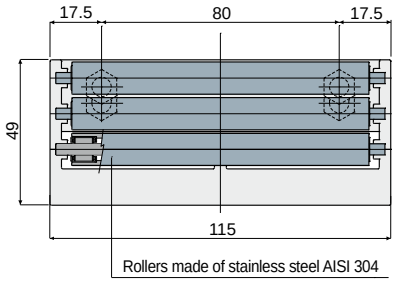

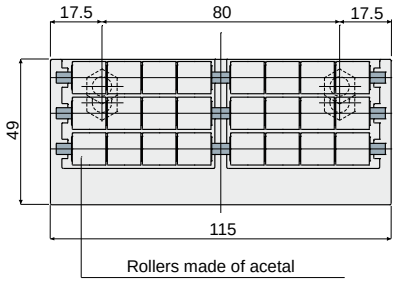

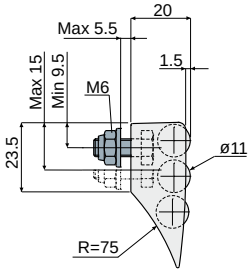

Rollers made of acetal	Rollers made of stainless steel AISI 304
Code	Code
258 / 82004	**258 / 85003**

MATERIALS: Modular transfer plate with external module made of acetal grey colour; rollers made of grey acetal or stainless steel AISI 304; pins and fixing nuts are made of stainless steel AISI 304.

FEATURES: To be assembled at the end of your conveyor to help the products transfer. Easy to assemble, low friction coefficient, minimum noise level, extremely cleanable.

BOX QUANTITY: 8 pieces.

ON REQUEST:

- **External module and rollers:** Can be produced in other colours.
- **Box quantity:** According to your request.

Modular transfer plates with lip
(width 115 mm 2 rows of rollers)

Part. **259**

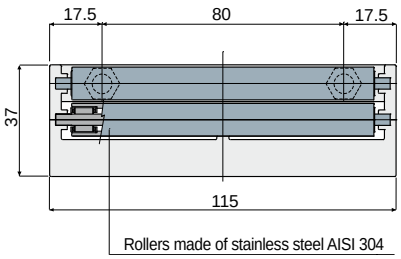

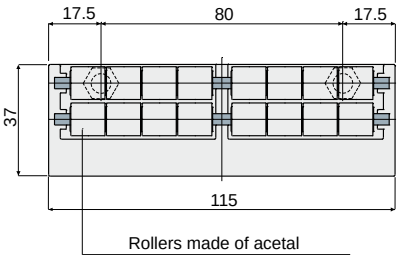

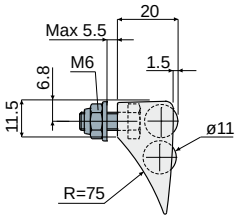

Rollers made of acetal	Rollers made of stainless steel AISI 304
Code	Code
259 / 82003	**259 / 85002**

MATERIALS: Modular transfer plate with external module made of acetal grey colour; rollers made of grey acetal or stainless steel AISI 304; pins and fixing nuts are made of stainless steel AISI 304.

FEATURES: To be assembled at the end of your conveyor to help the products transfer. Easy to assemble, low friction coefficient, minimum noise level, extremely cleanable.

BOX QUANTITY: 8 pieces.

ON REQUEST:

- **External module and rollers:** Can be produced in other colours.
- **Box quantity:** According to your request.

Modular transfer plates

Part. 430 Modular transfer plates without lip
(width 115 mm 3 rows of rollers)

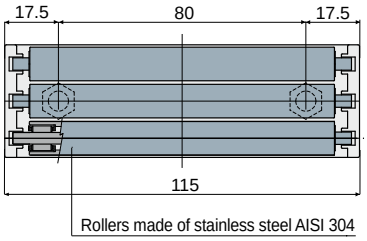

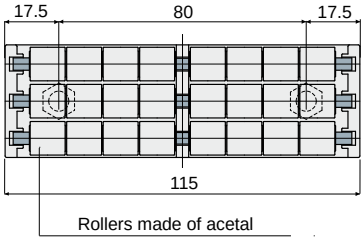

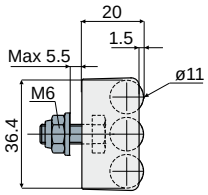

Rollers made of acetal	Rollers made of stainless steel AISI 304
Code	Code
430 / 85084	430 / 85080

MATERIALS: Modular transfer plate with external module made of acetal grey colour; rollers made of grey acetal or stainless steel AISI 304; pins and fixing nuts are made of stainless steel AISI 304.
FEATURES: To be assembled at the end of your conveyor to help the products transfer. Easy to assemble, low friction coefficient, minimum noise level, extremely cleanable.
BOX QUANTITY: 8 pieces.
ON REQUEST:
- **External module and rollers:** Can be produced in other colours.
- **Box quantity:** According to your request.

Part. 431 Modular transfer plates without lip
(width 115 mm 2 rows of rollers)

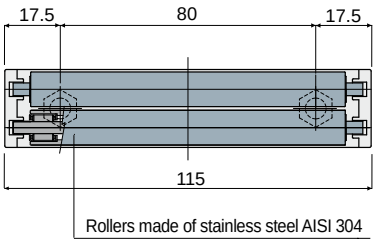

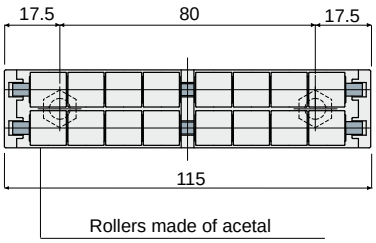

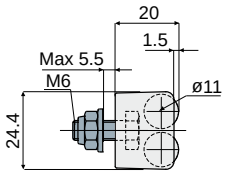

Rollers made of acetal	Rollers made of stainless steel AISI 304
Code	Code
431 / 85085	431 / 85081

MATERIALS: Modular transfer plate with external module made of acetal grey colour; rollers made of grey acetal or stainless steel AISI 304; pins and fixing nuts are made of stainless steel AISI 304.
FEATURES: To be assembled at the end of your conveyor to help the products transfer. Easy to assemble, low friction coefficient, minimum noise level, extremely cleanable.
BOX QUANTITY: 8 pieces.
ON REQUEST:
- **External module and rollers:** Can be produced in other colours.
- **Box quantity:** According to your request.

Modular transfer plates

Modular transfer plates with lip
(width 85 mm 5 rows of rollers)

Part. **260**

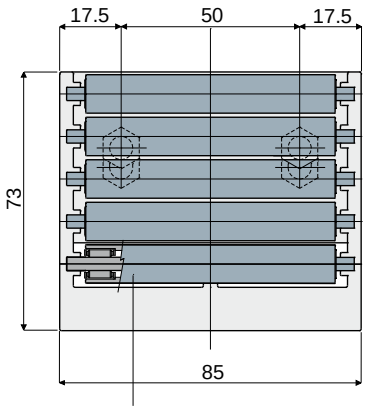

Rollers made of stainless steel AISI 304

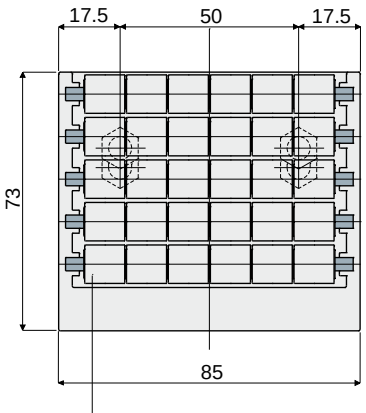

Rollers made of acetal

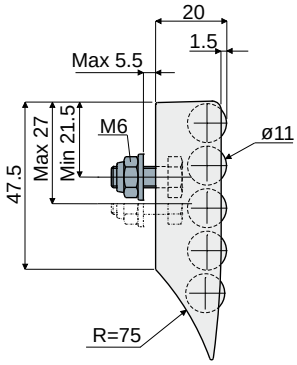

Rollers made of acetal	Rollers made of stainless steel AISI 304
Code	Code
260 / 82002	**260 / 85007**

MATERIALS: Modular transfer plate with external module made of acetal grey colour; rollers made of grey acetal or stainless steel AISI 304; pins and fixing nuts are made of stainless steel AISI 304.

FEATURES: To be assembled at the end of your conveyor to help the products transfer. Easy to assemble, low friction coefficient, minimum noise level, extremely cleanable.

BOX QUANTITY: 8 pieces.

ON REQUEST:

- **External module and rollers:** Can be produced in other colours.
- **Box quantity:** According to your request.

Modular transfer plates with lip
(width 85 mm 4 rows of rollers)

Part. **416**

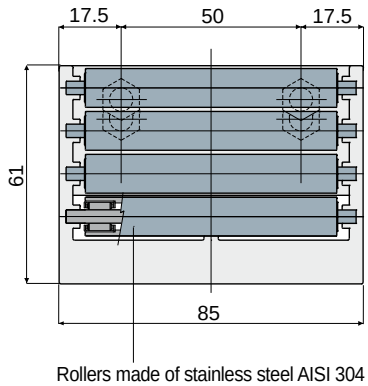

Rollers made of stainless steel AISI 304

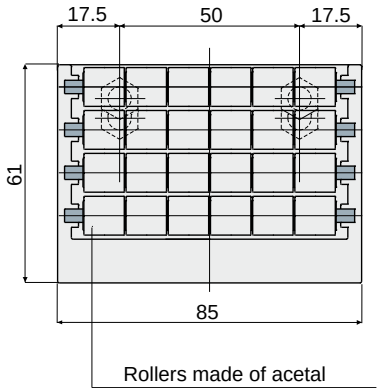

Rollers made of acetal

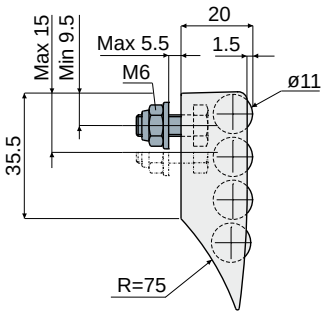

Rollers made of acetal	Rollers made of stainless steel AISI 304
Code	Code
416 / 84575	**416 / 85032**

MATERIALS: Modular transfer plate with external module made of acetal grey colour; rollers made of grey acetal or stainless steel AISI 304; pins and fixing nuts are made of stainless steel AISI 304.

FEATURES: To be assembled at the end of your conveyor to help the products transfer. Easy to assemble, low friction coefficient, minimum noise level, extremely cleanable.

BOX QUANTITY: 8 pieces.

ON REQUEST:

- **External module and rollers:** Can be produced in other colours.
- **Box quantity:** According to your request.

Modular transfer plates

Part. 261 Modular transfer plates with lip
(width 85 mm 3 rows of rollers)

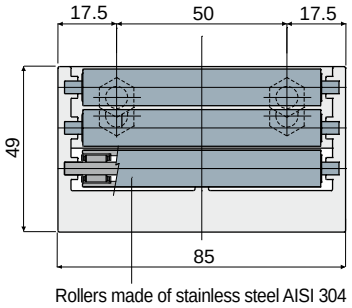

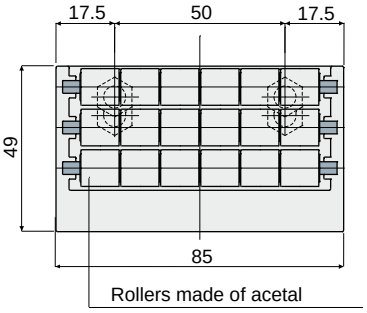

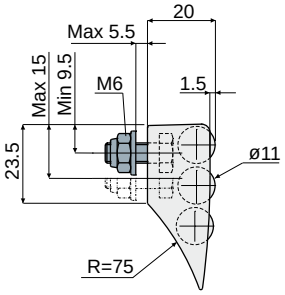

Rollers made of acetal	Rollers made of stainless steel AISI 304
Code	Code
261 / 82001	261 / 85006

MATERIALS: Modular transfer plate with external module made of acetal grey colour; rollers made of grey acetal or stainless steel AISI 304; pins and fixing nuts are made of stainless steel AISI 304.

FEATURES: To be assembled at the end of your conveyor to help the products transfer. Easy to assemble, low friction coefficient, minimum noise level, extremely cleanable.

BOX QUANTITY: 8 pieces.

ON REQUEST:

- **External module and rollers:** Can be produced in other colours.
- **Box quantity:** According to your request.

Part. 262 Modular transfer plates with lip
(width 85 mm 2 rows of rollers)

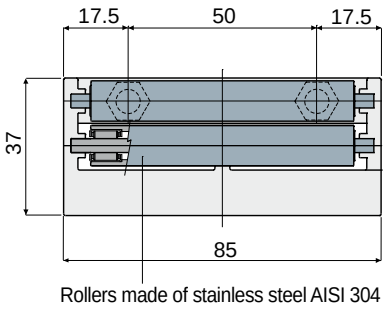

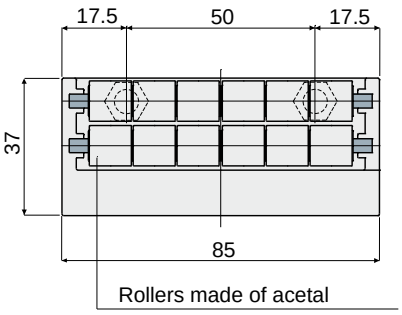

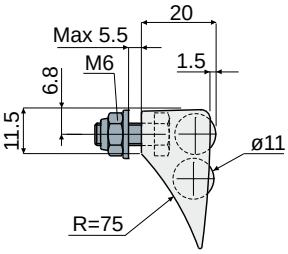

Rollers made of acetal	Rollers made of stainless steel AISI 304
Code	Code
262 / 82000	262 / 85005

MATERIALS: Modular transfer plate with external module made of acetal grey colour; rollers made of grey acetal or stainless steel AISI 304; pins and fixing nuts are made of stainless steel AISI 304.

FEATURES: To be assembled at the end of your conveyor to help the products transfer. Easy to assemble, low friction coefficient, minimum noise level, extremely cleanable.

BOX QUANTITY: 8 pieces.

ON REQUEST:

- **External module and rollers:** Can be produced in other colours.
- **Box quantity:** According to your request.

Modular transfer plates

Modular transfer plates without lip
(width 85 mm 3 rows of rollers)

Part. **432**

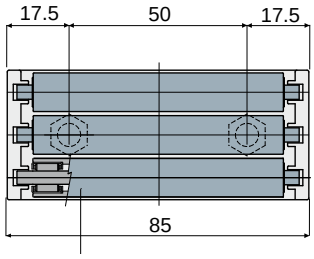

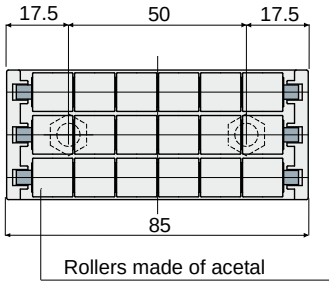

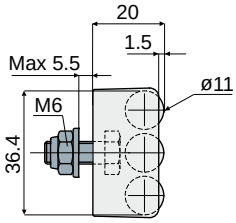

Rollers made of acetal	Rollers made of stainless steel AISI 304
Code	Code
432 / 85086	**432 / 85082**

MATERIALS: Modular transfer plate with external module made of acetal grey colour; rollers made of grey acetal or stainless steel AISI 304; pins and fixing nuts are made of stainless steel AISI 304.
FEATURES: To be assembled at the end of your conveyor to help the products transfer. Easy to assemble, low friction coefficient, minimum noise level, extremely cleanable.
BOX QUANTITY: 8 pieces.
ON REQUEST:
- **External module and rollers:** Can be produced in other colours.
- **Box quantity:** According to your request.

Modular transfer plates without lip
(width 85 mm 2 rows of rollers)

Part. **433**

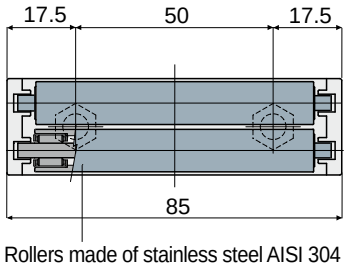

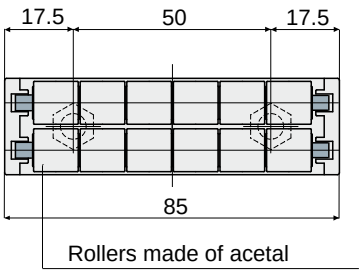

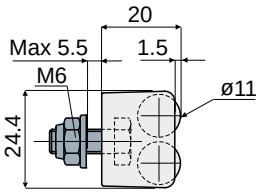

Rollers made of acetal	Rollers made of stainless steel AISI 304
Code	Code
433 / 85087	**433 / 85083**

MATERIALS: Modular transfer plate with external module made of acetal grey colour; rollers made of grey acetal or stainless steel AISI 304; pins and fixing nuts are made of stainless steel AISI 304.
FEATURES: To be assembled at the end of your conveyor to help the products transfer. Easy to assemble, low friction coefficient, minimum noise level, extremely cleanable.
BOX QUANTITY: 8 pieces.
ON REQUEST:
- **External module and rollers:** Can be produced in other colours.
- **Box quantity:** According to your request.

Product guides and accessories

Part. 306 Roller side guide (single type, with pearls)

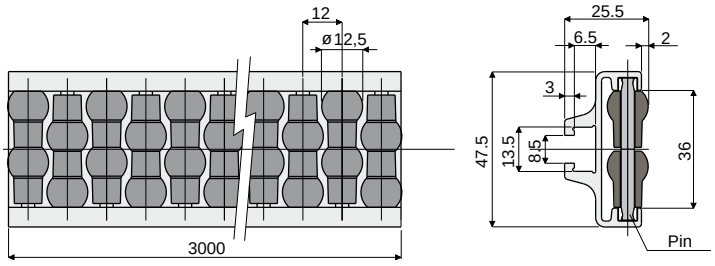

Pins made of acetal	Pins made of stainless steel AISI 304
Code	Code
306 / 82809	306 / 84548

MATERIALS: Metal profile in anodized aluminium; rollers in grey polyethylene; support pins in white acetal or in stainless steel AISI 304.
FEATURES: Supplied already assembled, in bars of 3 meters length.
Min. curvature radius: 250 mm.
BOX QUANTITY: 2 bars of 3 meters (total 6 meters).
ON REQUEST:

- **Roller side guide:** Other colours.

Example of application

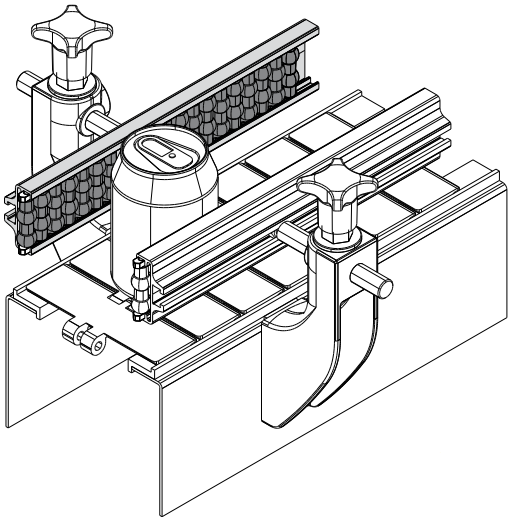

Part. 307 Roller side guide (double type, with pearls)

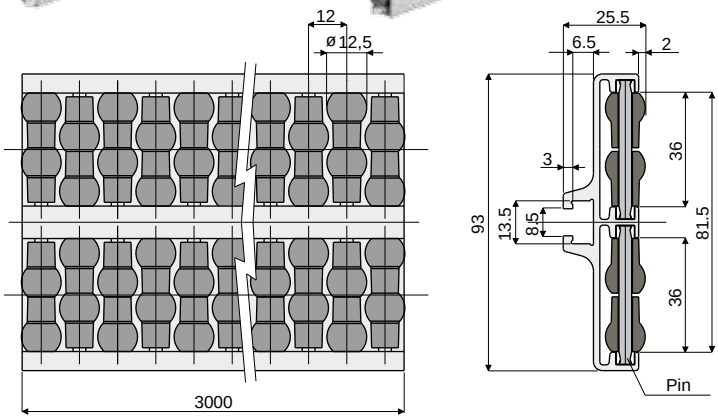

Pins made of acetal	Pins made of stainless steel AISI 304
Code	Code
307 / 82810	307 / 84549

MATERIALS: Metal profile in anodized aluminium; rollers in grey polyethylene; support pins in white acetal or in stainless steel AISI 304.
FEATURES: Supplied already assembled, in bars of 3 meters length.
Min. curvature radius: 500 mm.
BOX QUANTITY: 2 bars of 3 meters (total 6 meters).
ON REQUEST:

- **Roller side guide:** Other colours.

Example of application

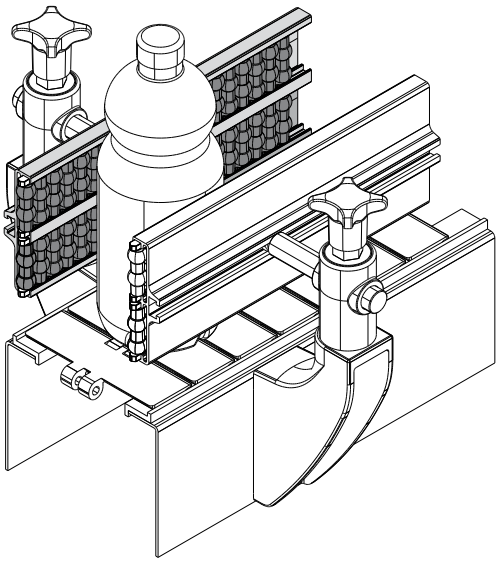

Product guides and accessories

Roller central guide (single type, with pearls) Part. 308

Example of application

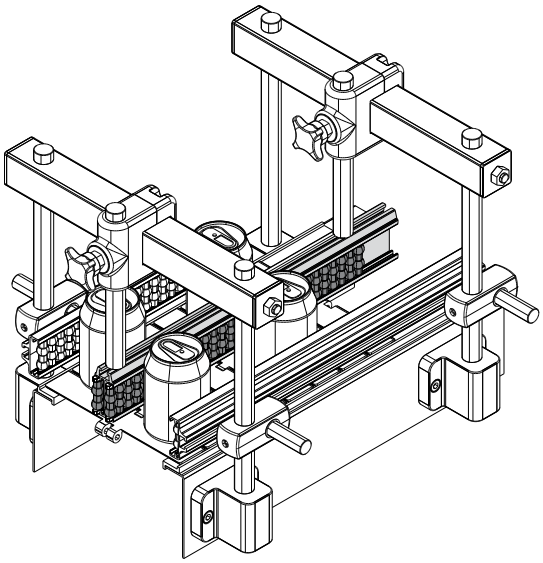

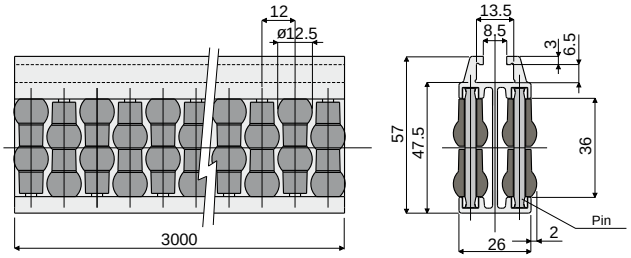

Pins made of acetal	Pins made of stainless steel AISI 304
Code	Code
308 / 82811	308 / 84550

MATERIALS: Metal profile in anodized aluminium; rollers in grey polyethylene; support pins in white acetal or in stainless steel AISI 304.

FEATURES: Supplied already assembled, in bars of 3 meters length.
Min. curvature radius: 500 mm.

BOX QUANTITY: 2 bars of 3 meters (total 6 meters).

ON REQUEST:

- **Roller central guide:** Other colours.

Roller central guide (double type, with pearls) Part. 319

Example of application

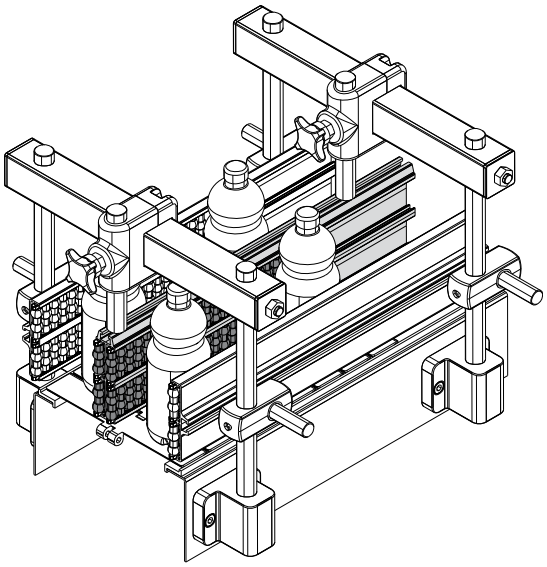

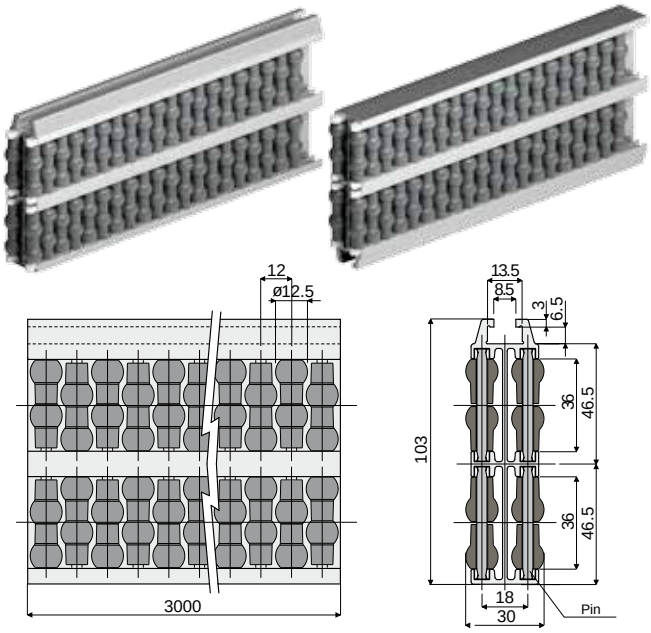

Pins made of acetal	Pins made of stainless steel AISI 304
Code	Code
319 / 82916	319 / 84551

MATERIALS: Metal profile in anodized aluminium; rollers in grey polyethylene; support pins in white acetal or in stainless steel AISI 304.

FEATURES: Supplied already assembled, in bars of 3 meters length.
Min. curvature radius: 750 mm.

BOX QUANTITY: 2 bars of 3 meters (total 6 meters).

ON REQUEST:

- **Roller central guide:** Other colours.

Product guides and accessories

Part. 325 Roller side guide (single type, with cylinders)

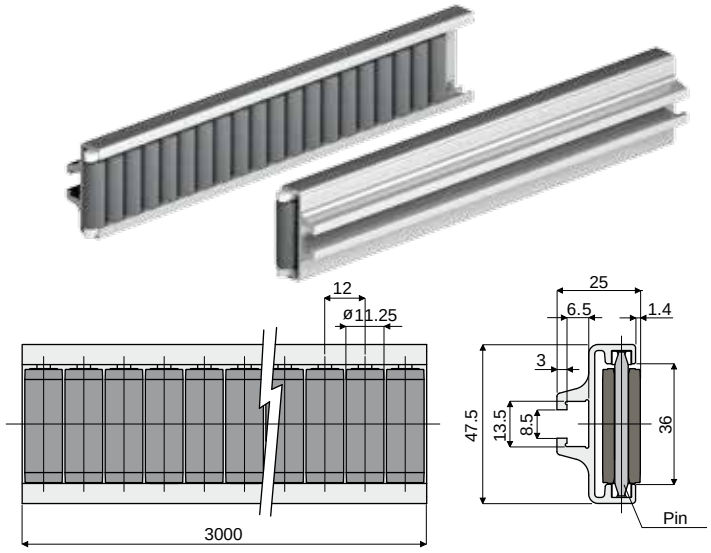

Pins made of acetal	Pins made of stainless steel AISI 304
Code	Code
325 / 83003	325 / 84552

MATERIALS: Metal profile in anodized aluminium; rollers in grey polyethylene; support pins in white acetal or in stainless steel AISI 304.

FEATURES: Supplied already assembled, in bars of 3 meters length.
Min. curvature radius: 250 mm.

BOX QUANTITY: 2 bars of 3 meters (total 6 meters).

ON REQUEST:

- **Roller side guide:** Other colours.

Example of application

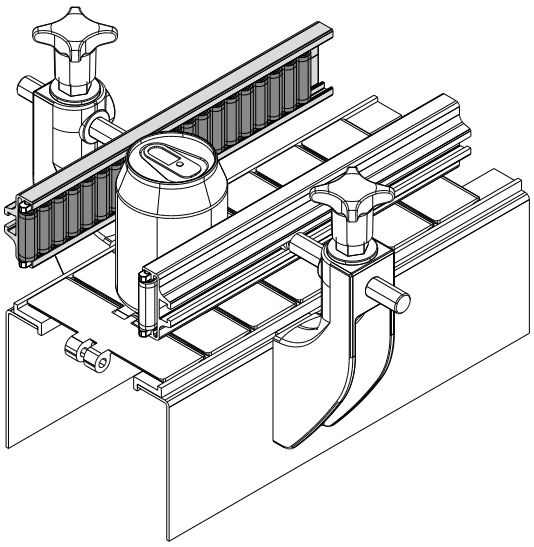

Part. 326 Roller side guide (double type, with cylinders)

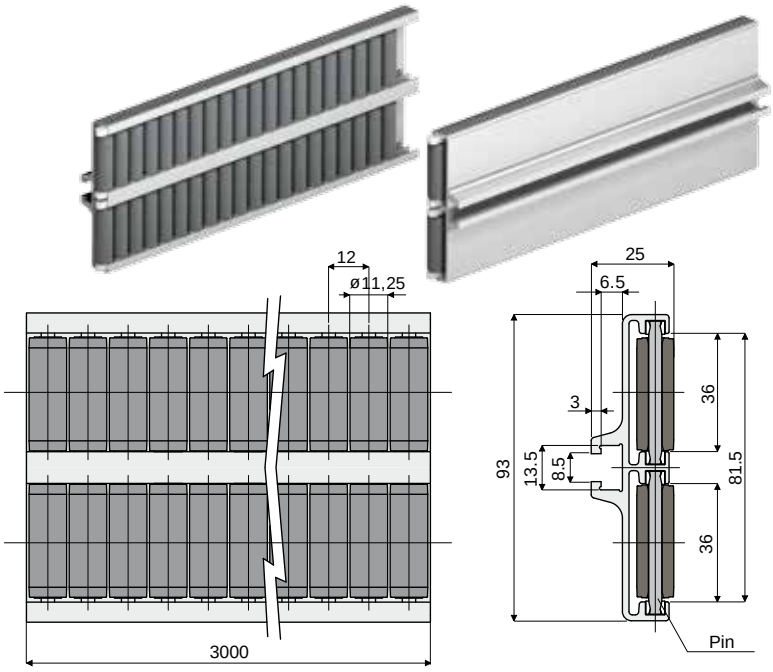

Pins made of acetal	Pins made of stainless steel AISI 304
Code	Code
326 / 83004	326 / 84553

MATERIALS: Metal profile in anodized aluminium; rollers in grey polyethylene; support pins in white acetal or in stainless steel AISI 304.

FEATURES: Supplied already assembled, in bars of 3 meters length.
Min. curvature radius: 500 mm.

BOX QUANTITY: 2 bars of 3 meters (total 6 meters).

ON REQUEST:

- **Roller side guide:** Other colours.

Example of application

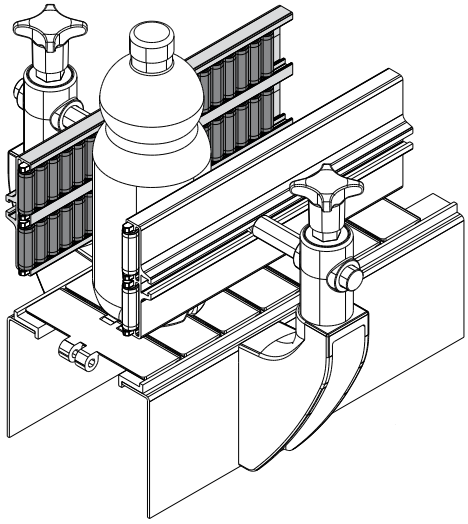

Product guides and accessories

Example of application

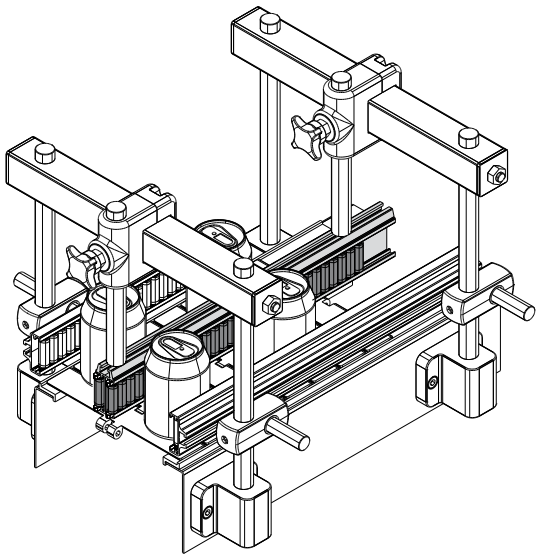

Roller central guide (single type, with cylinders) Part. 327

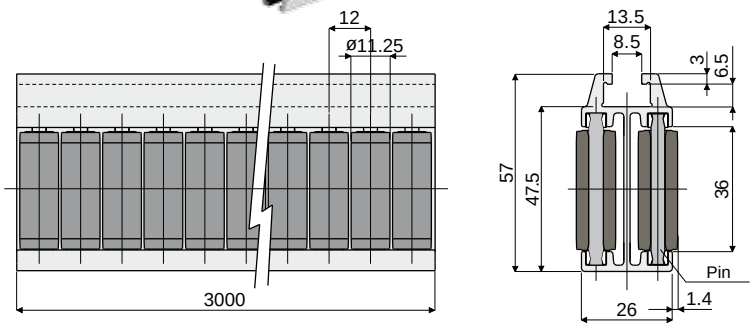

Pins made of acetal	Pins made of stainless steel AISI 304
Code	Code
327 / 83005	327 / 84555

MATERIALS: Metal profile in anodized aluminium; rollers in grey polyethylene; support pins in white acetal or in stainless steel AISI 304.

FEATURES: Supplied already assembled, in bars of 3 meters length.
Min. curvature radius: 500 mm.

BOX QUANTITY: 2 bars of 3 meters (total 6 meters).

ON REQUEST:

- **Roller central guide:** Other colours.

Example of application

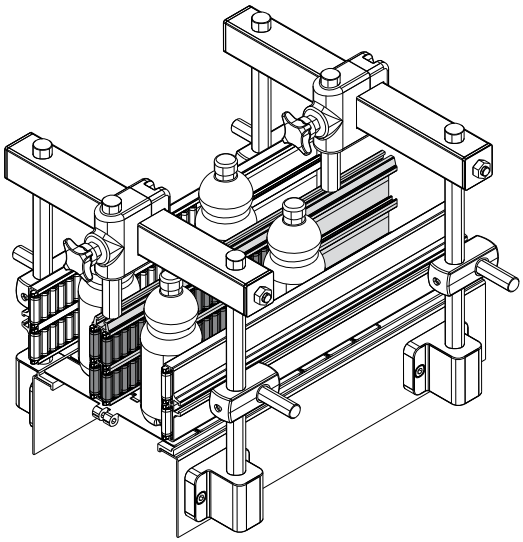

Roller central guide (double type, with cylinders) Part. 328

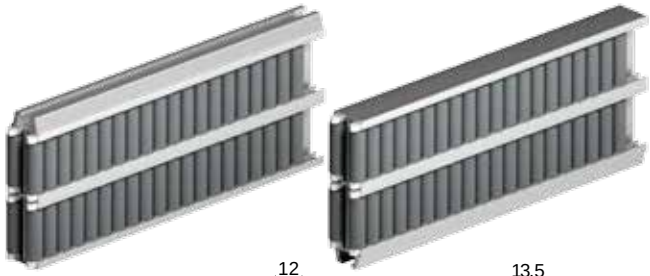

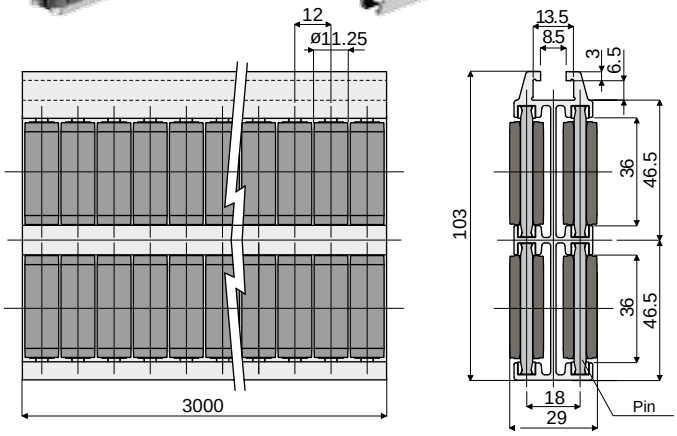

Pins made of acetal	Pins made of stainless steel AISI 304
Code	Code
328 / 83006	328 / 84556

MATERIALS: Metal profile in anodized aluminium; rollers in grey polyethylene; support pins in white acetal or in stainless steel AISI 304.

FEATURES: Supplied already assembled, in bars of 3 meters length.
Min. curvature radius: 750 mm.

BOX QUANTITY: 2 bars of 3 meters (total 6 meters).

ON REQUEST:

- **Roller central guide:** Other colours.

Product guides and accessories

Part. 355 **Roller side guide** (single type, with round rollers)

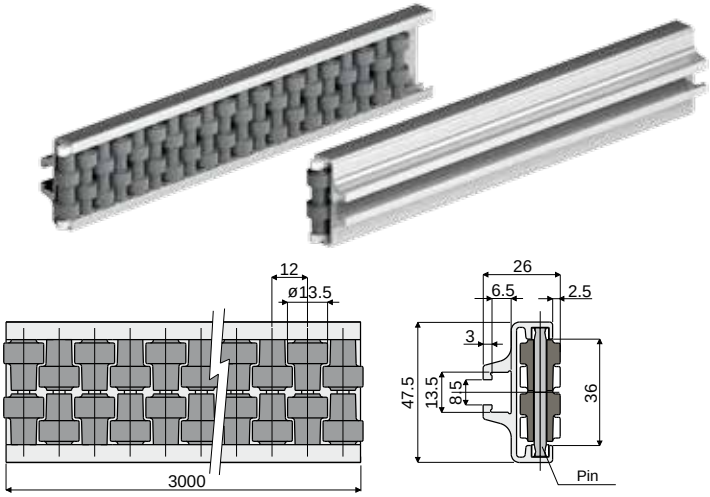

Example of application

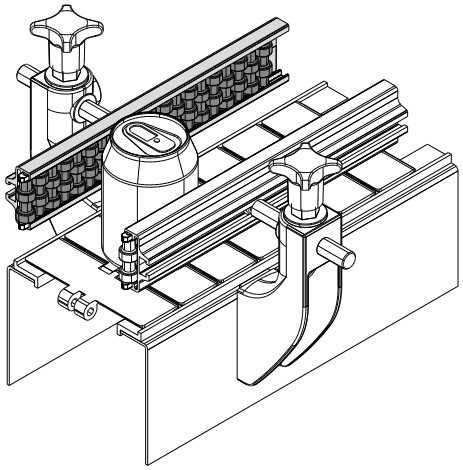

Pins made of acetal	Pins made of stainless steel AISI 304
Code	Code
355 / 83473	355 / 84557

MATERIALS: Metal profile in anodized aluminium; rollers in grey polyethylene; support pins in white acetal or in stainless steel AISI 304.

FEATURES: Supplied already assembled, in bars of 3 meters length.
Min. curvature radius: 250 mm.

BOX QUANTITY: 2 bars of 3 meters (total 6 meters).

ON REQUEST:

- **Roller side guide:** Other colours.

Part. 356 **Roller side guide** (double type, with round rollers)

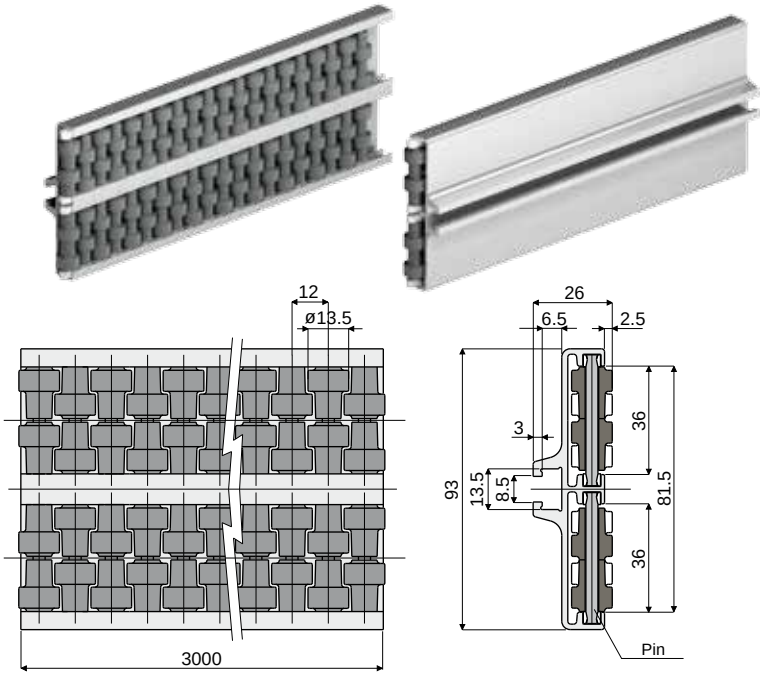

Example of application

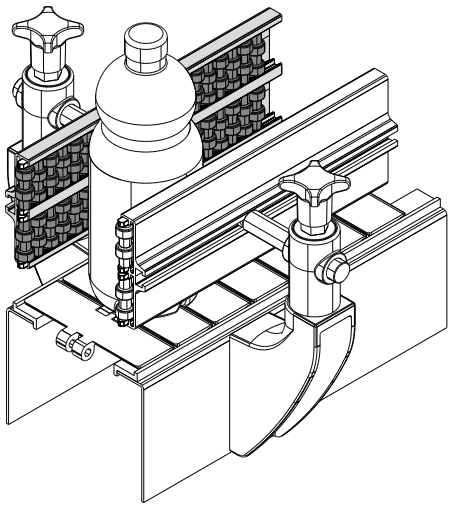

Pins made of acetal	Pins made of stainless steel AISI 304
Code	Code
356 / 83474	356 / 84558

MATERIALS: Metal profile in anodized aluminium; rollers in grey polyethylene; support pins in white acetal or in stainless steel AISI 304.

FEATURES: Supplied already assembled, in bars of 3 meters length.
Min. curvature radius: 500 mm.

BOX QUANTITY: 2 bars of 3 meters (total 6 meters).

ON REQUEST:

- **Roller side guide:** Other colours.

Product guides and accessories

Example of application

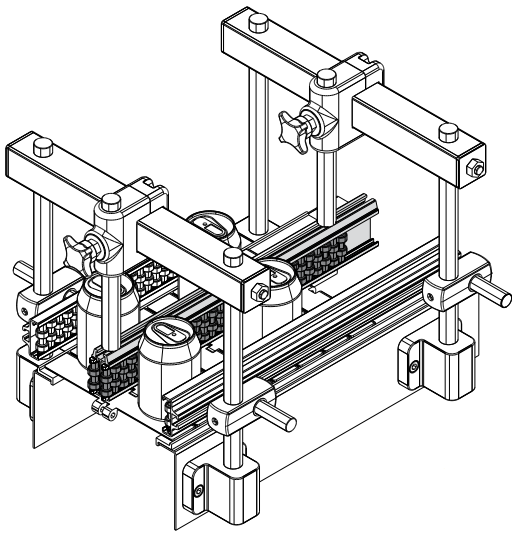

Roller central guide (single type, with round rollers) Part. 357

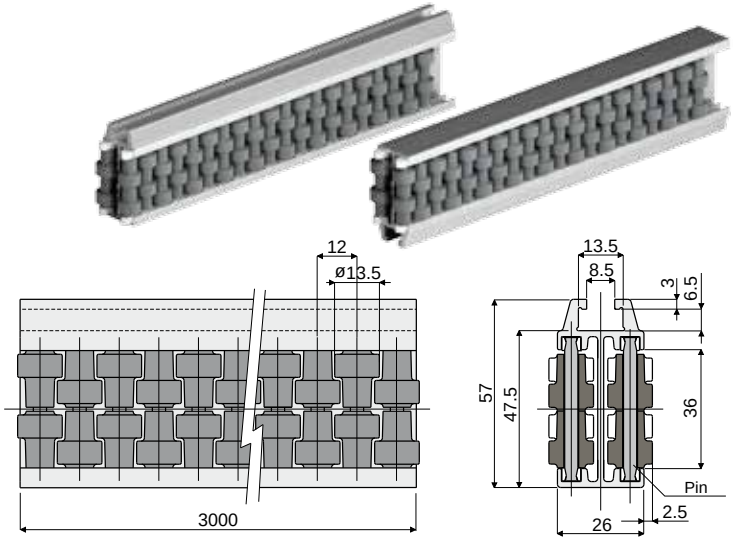

Pins made of acetal	Pins made of stainless steel AISI 304
Code	Code
357 / 83475	357 / 84559

MATERIALS: Metal profile in anodized aluminium; rollers in grey polyethylene; support pins in white acetal or in stainless steel AISI 304.

FEATURES: Supplied already assembled, in bars of 3 meters length.
Min. curvature radius: 500 mm.

BOX QUANTITY: 2 bars of 3 meters (total 6 meters).

ON REQUEST:

- **Roller side guide:** Other colours.

Example of application

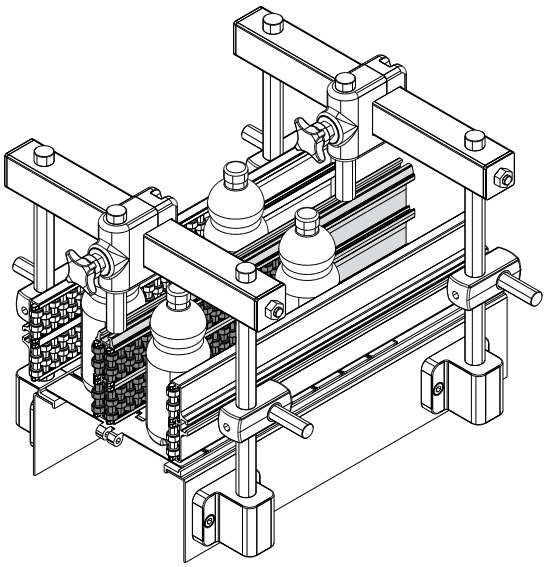

Roller central guide (double type, with round rollers) Part. 358

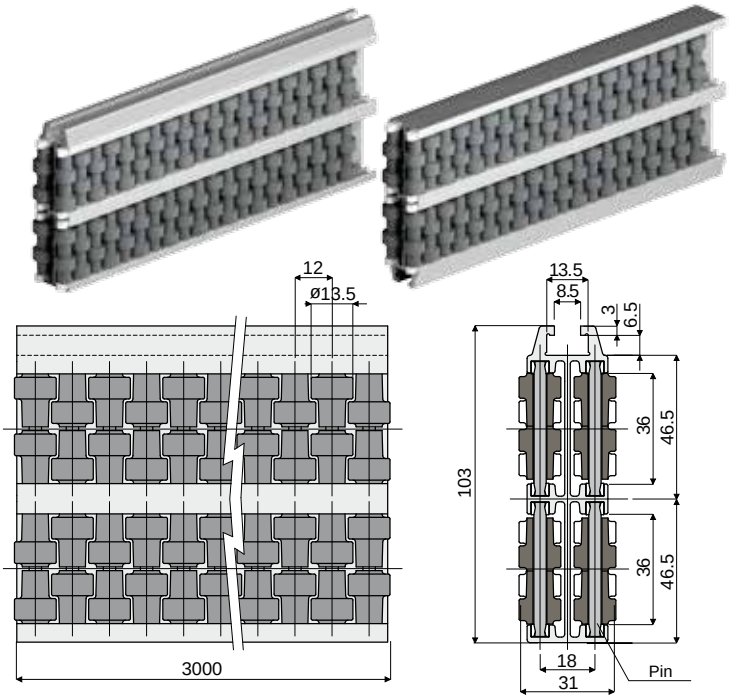

Pins made of acetal	Pins made of stainless steel AISI 304
Code	Code
358 / 83476	358 / 84560

MATERIALS: Metal profile in anodized aluminium; rollers in grey polyethylene; support pins in white acetal or in stainless steel AISI 304.

FEATURES: Supplied already assembled, in bars of 3 meters length.
Min. curvature radius: 750 mm.

BOX QUANTITY: 2 bars of 3 meters (total 6 meters).

ON REQUEST:

- **Roller side guide:** Other colours.

Product guides and accessories

Part. 329 Guide profile for products

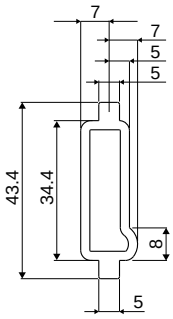

Example of application

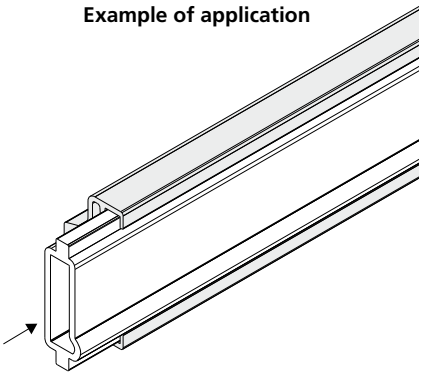

Code
329 / 83007

MATERIALS: Profile made of natural polyethylene white colour.
FEATURES: Supplied in bars of 3 meters length.
To be used with side guides Part.320, 321, 322, 323.
BOX QUANTITY: 6 bars of 3 meters (total 18 meters).
ON REQUEST:
- Box quantity: According to your request.

Part. 320 - 321 - 322 - 323 Profiles for guides

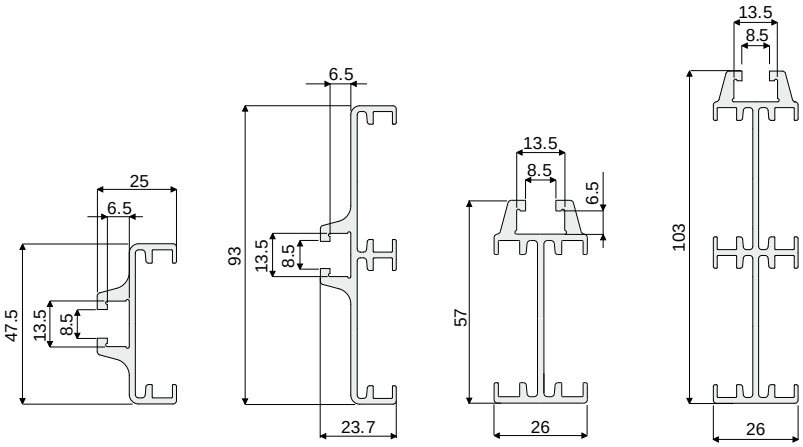

Type	Version	Code	Length
Side	Single	320 / 82917	3000
	Double	321 / 82918	3000
Central	Single	322 / 82919	3000
	Double	323 / 82920	3000

MATERIALS: Metal profile in anodized aluminium.
FEATURES: Supplied in bars of 3 meters length.
To be used with roller guides Part. 306, 307, 308, 319, 325, 326, 327, 328.
BOX QUANTITY: 2 bars of 3 meters (total 6 meters).

Part. 318 Connecting bar for roller guides

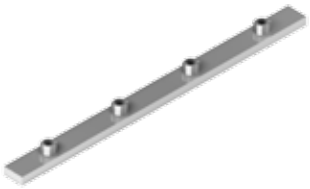

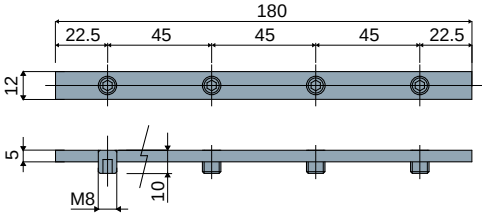

Example of application

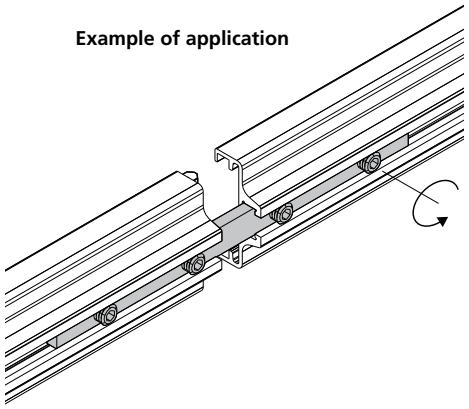

MATERIALS: Bar is made of zinc plated steel supplied with 4 screws M8x10.
FEATURES: To be used for connecting the metal profiles of Part. 306, 307, 308, 319, 325, 326, 327, 328, 320, 321, 322, 323.
BOX QUANTITY: 8 pieces.
ON REQUEST:
- Box quantity: According to your request.

Code
318 / 82913

Product guides and accessories

Closing cap
(for roller side guide, single type)

Part. **415**

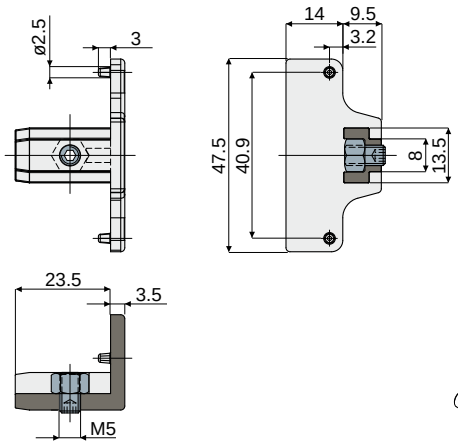

Example of application

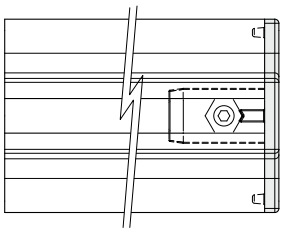

Example of application

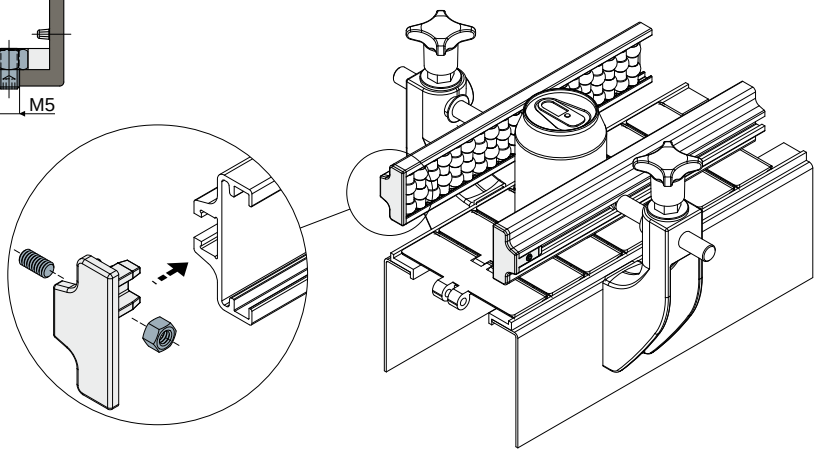

Code
415 / 84547

MATERIALS: Cap in reinforced polyamide grey colour; nut and grub screw in stainless steel AISI 304.
FEATURES: To be used as a closure cap at the extremities of the roller side guides: Part.306, 325, 355, 320.
BOX QUANTITY: 24 pieces.
ON REQUEST:
- Assembling of: Nuts and grab screws.
- Box quantity: According to your request.

Screw with shaped head
(hammer head)

Part. **437**

NEW

Example of application

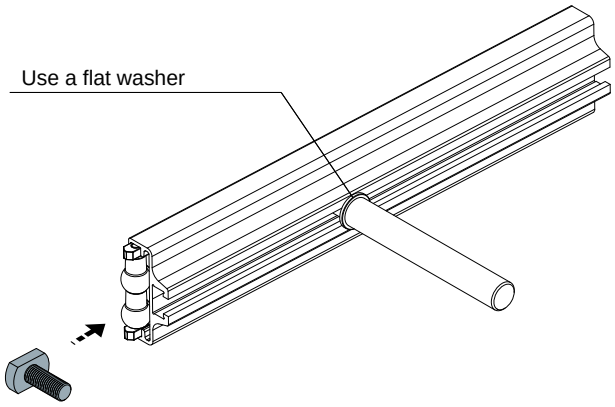

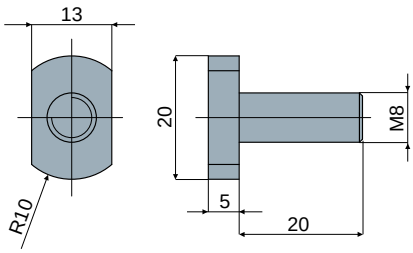

Code
437 / 85235

MATERIALS: Screw in zinc-plated steel.
FEATURES: To be used with side guides Part.306, 307, 308, 319, 325, 326, 355, 356.
BOX QUANTITY: 24 pieces.
ON REQUEST:
- Box quantity: According to your request.

Product guides and accessories

Part. 340 Separation Block for roller side guide
(single type)

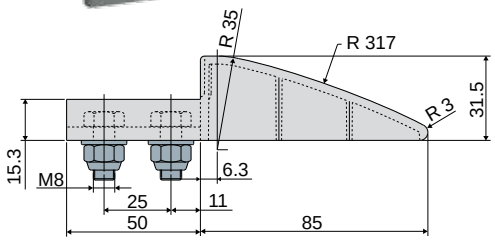

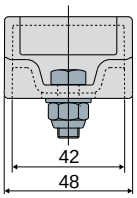

Code
340 / 83357

MATERIALS: Separation block is made of polyethylene, grey colour; bolts and nuts in stainless steel AISI 304.
FEATURES: Supplied complete with bolts and nuts.
To be used at the end of the roller side guides (Part.306, 325, 355, 320), to help the arrival of the products.
BOX QUANTITY: 8 pieces.
ON REQUEST:
- **Separation blocks:** Other colours.
- **Box quantity:** According to your request.

Example of application

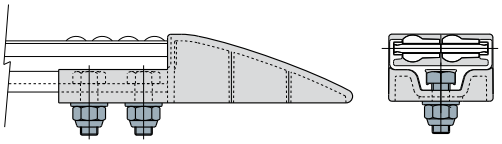

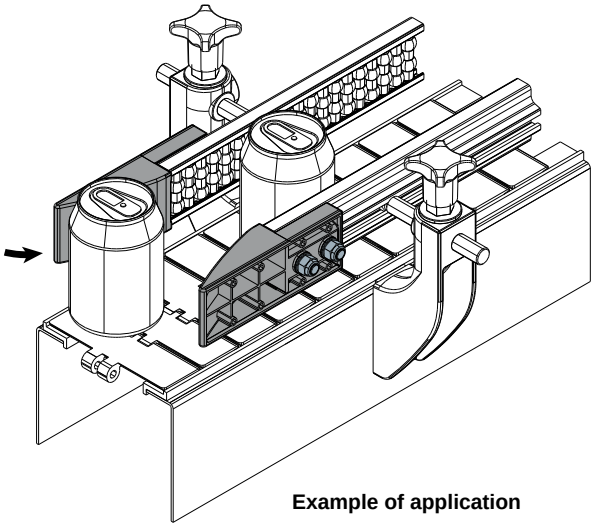

Example of application

Part. 341 Separation Block for roller central guide
(single type)

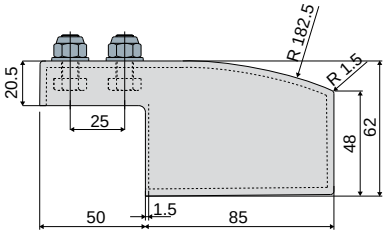

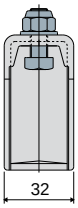

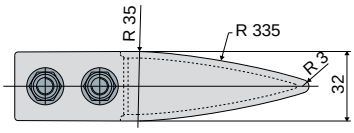

Code
341 / 83359

MATERIALS: Separation block is made of polyethylene, grey colour; bolts and nuts in stainless steel AISI 304.
FEATURES: Supplied complete with bolts and nuts.
To be used at the end of the roller side guides (Part.308, 327, 357, 322), to help the arrival of the products.
BOX QUANTITY: 8 pieces.
ON REQUEST:
- **Separation blocks:** Other colours.
- **Box quantity:** According to your request.

Example of application

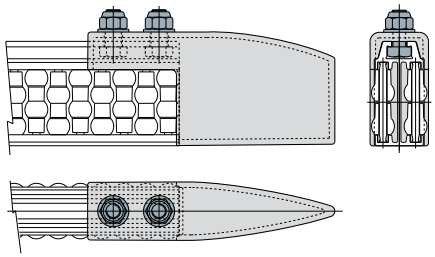

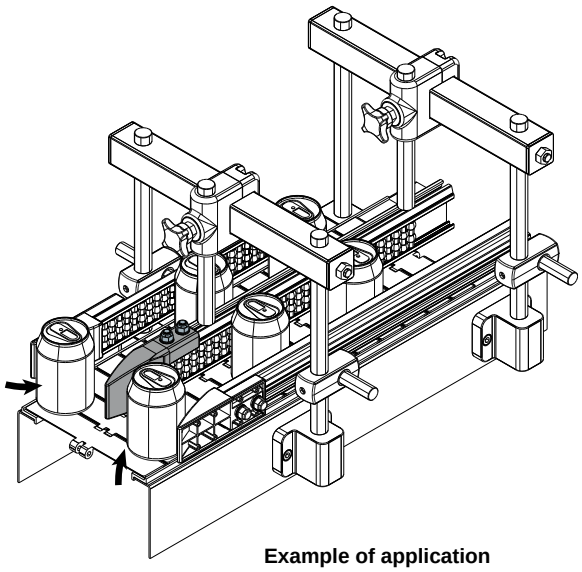

Example of application

Product guides and accessories

Example of application

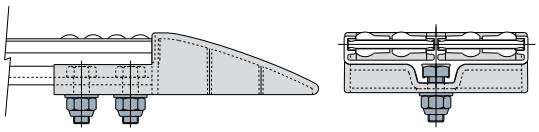

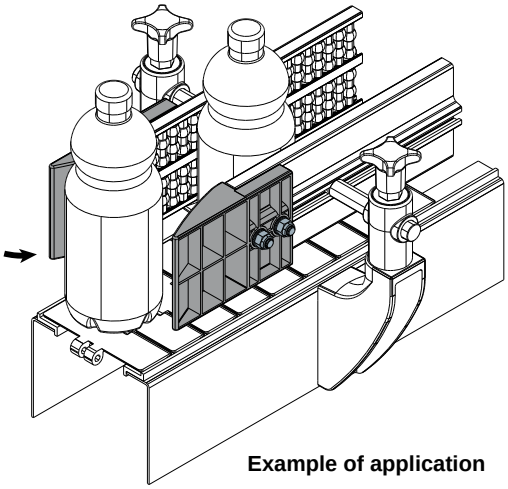

Example of application

Separation Block for roller side guide (double type) Part. 342

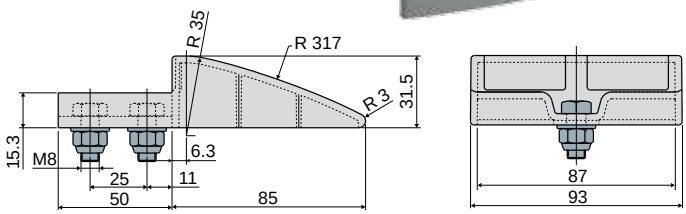

Code
342 / 83361

MATERIALS: Separation block is made of polyethylene, grey colour; bolts and nuts in stainless steel AISI 304.
FEATURES: Supplied complete with bolts and nuts.
To be used at the end of the roller side guides (Part.307, 326, 356, 321), to help the arrival of the products.
BOX QUANTITY: 8 pieces.
ON REQUEST:
- **Separation blocks:** Other colours.
- **Box quantity:** According to your request.

Example of application

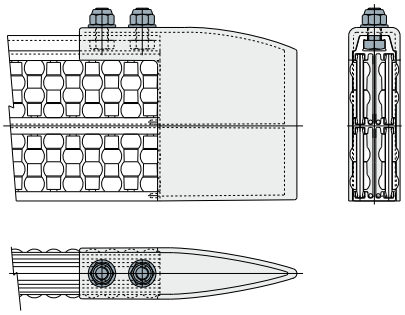

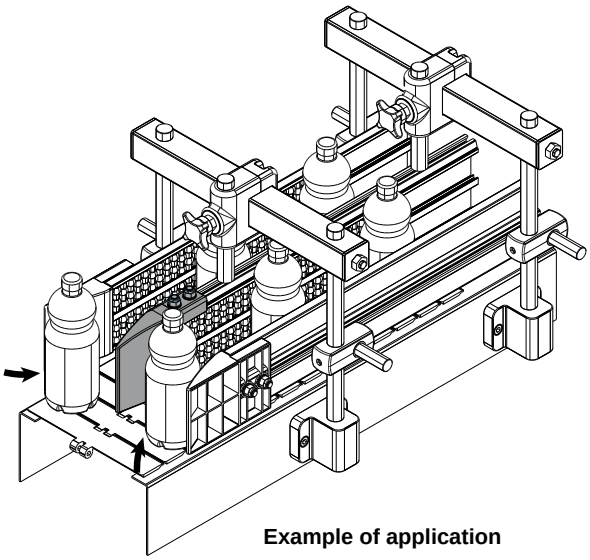

Example of application

Separation Block for roller central guide (double type) Part. 343

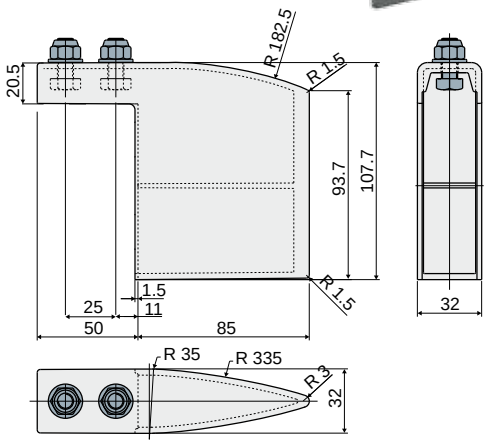

Code
343 / 83363

MATERIALS: Separation block is made of polyethylene, grey colour; bolts and nuts in stainless steel AISI 304.
FEATURES: Supplied complete with bolts and nuts.
To be used at the end of the roller side guides (Part.319, 328, 358, 323), to help the arrival of the products.
BOX QUANTITY: 8 pieces.
ON REQUEST:
- **Separation blocks:** Other colours.
- **Box quantity:** According to your request.

Product guides and accessories

Part. 345 Roller side guide (single type, with pearls)

(375 mm modules)

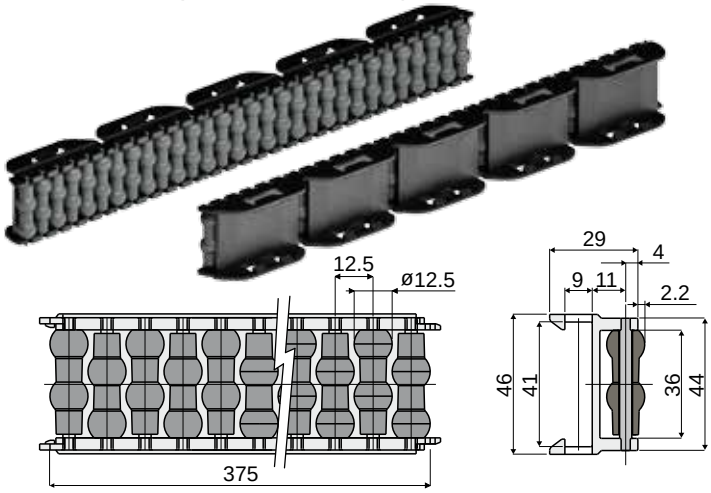

Example of application

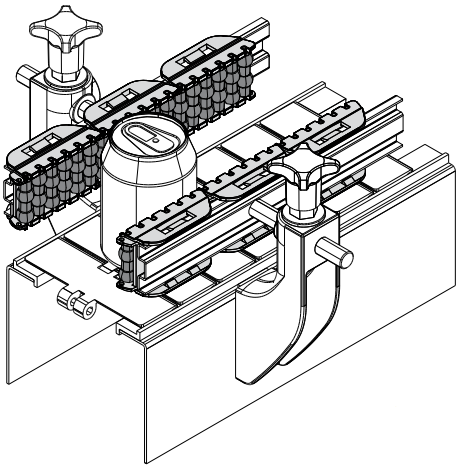

Pins made of acetal	Pins made of stainless steel AISI 304
Code	Code
345 / 83380	345 / 86717

NEW

MATERIALS: Rollers in polyethylene grey colour; modules in acetal resin black colour; support pins in black acetal or in stainless steel AISI 304.
FEATURES: Supplied already assembled, in modules of 375 mm length, for 40x8 mm plate. Min. curvature radius: ext = 500 mm; int. = 350 mm.
BOX QUANTITY: 12 pieces.
ON REQUEST:
- **Module and rollers:** Can be produced in other colours.
- **Box quantity:** According to your request.

Part. 423 Roller side guide (double type, with pearls)

(375 mm modules)

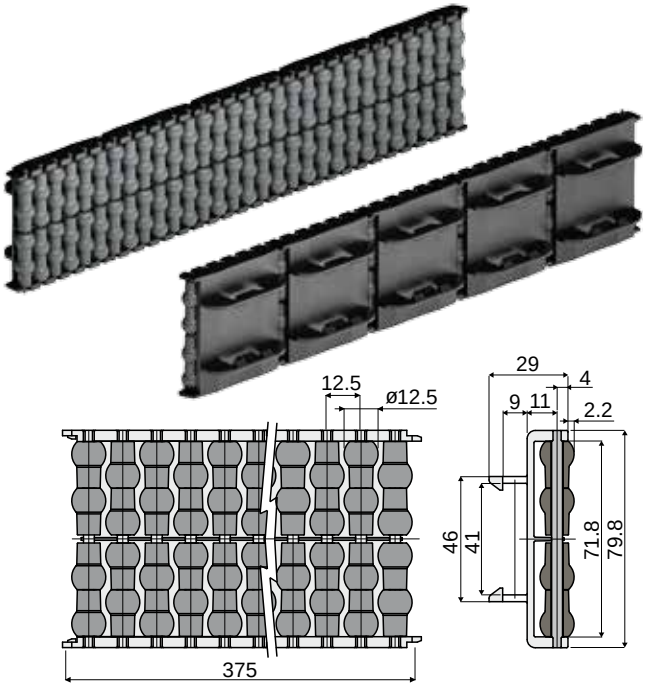

Example of application

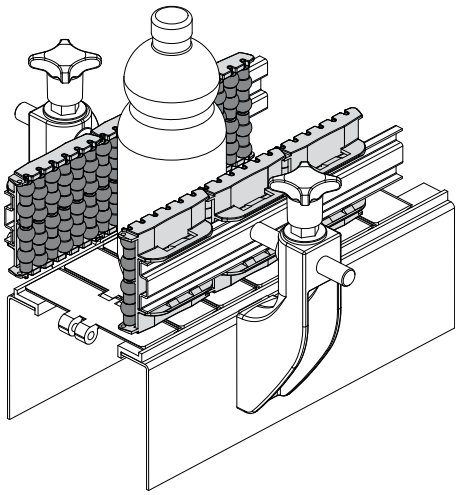

Pins made of acetal	Pins made of stainless steel AISI 304
Code	Code
423 / 84818	423 / 85272

NEW

MATERIALS: Rollers in polyethylene grey colour; modules in acetal resin black colour; support pins in black acetal or in stainless steel AISI 304.
FEATURES: Supplied already assembled, in modules of 375 mm length, for 40x8 mm plate. Min. curvature radius: ext = 500 mm; int. = 350 mm.
BOX QUANTITY: 12 pieces.
ON REQUEST:
- **Module and rollers:** Can be produced in other colours.
- **Box quantity:** According to your request.

Product guides and accessories

Example of application

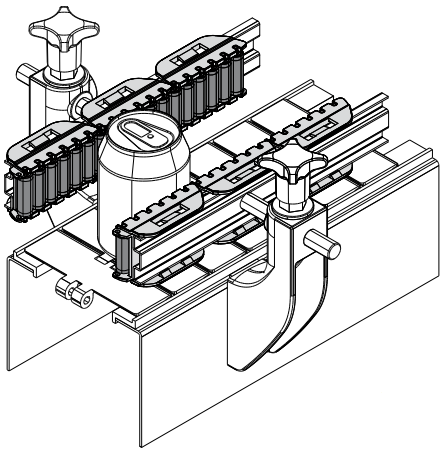

Roller side guide (single type, with cylinders) Part. 339

(375 mm modules)

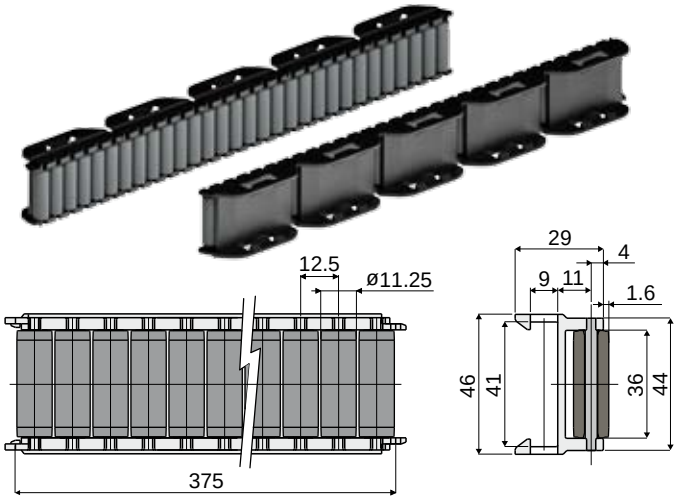

Pins made of acetal	Pins made of stainless steel AISI 304
Code	Code
339 / 83319	339 / 86718

NEW

MATERIALS: Rollers in polyethylene grey colour; modules in acetal resin black colour; support pins in black acetal or in stainless steel AISI 304.
FEATURES: Supplied already assembled, in modules of 375 mm length, for 40x8 mm plate. Min. curvature radius: ext = 500 mm; int. = 350 mm.
BOX QUANTITY: 12 pieces.
ON REQUEST:
- **Module and rollers:** can be produced in other colours.
- **Box quantity:** According to your request.

Example of application

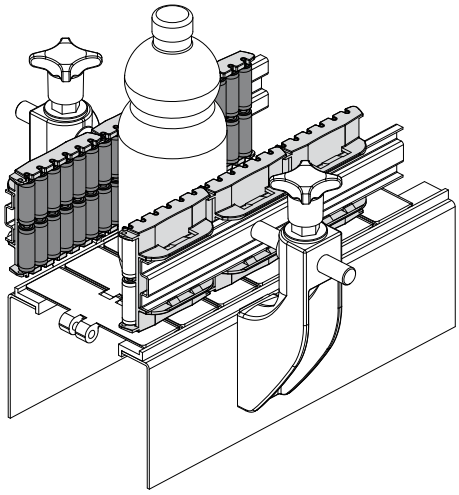

Roller side guide (double type, with cylinders) Part. 422

(375 mm modules)

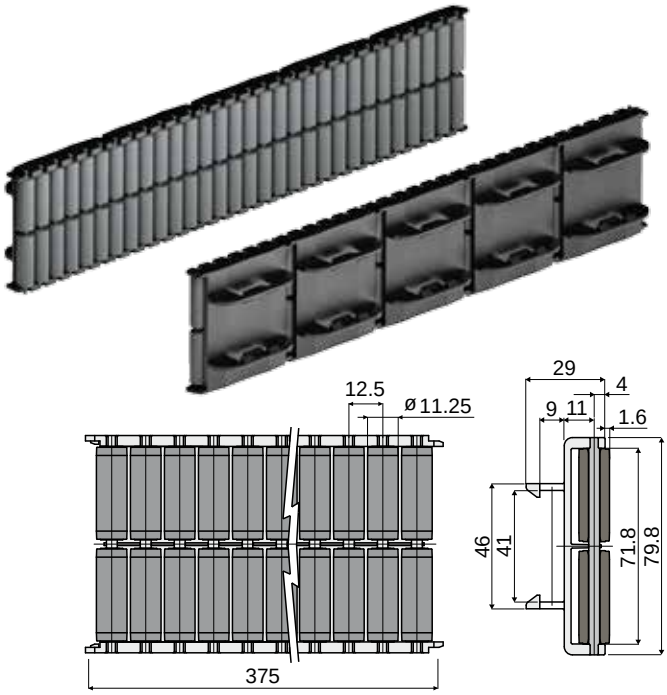

Pins made of acetal	Pins made of stainless steel AISI 304
Code	Code
422 / 84817	422 / 85273

NEW

MATERIALS: Rollers in polyethylene grey colour; modules in acetal resin black colour; support pins in black acetal or in stainless steel AISI 304.
FEATURES: Supplied already assembled, in modules of 375 mm length, for 40x8 mm plate. Min. curvature radius: ext = 500 mm; int. = 350 mm.
BOX QUANTITY: 12 pieces.
ON REQUEST:
- **Module and rollers:** Can be produced in other colours.
- **Box quantity:** According to your request.

Product guides and accessories

Part. 344 Roller side guide (single type, with small cylinders)
(375 mm modules)

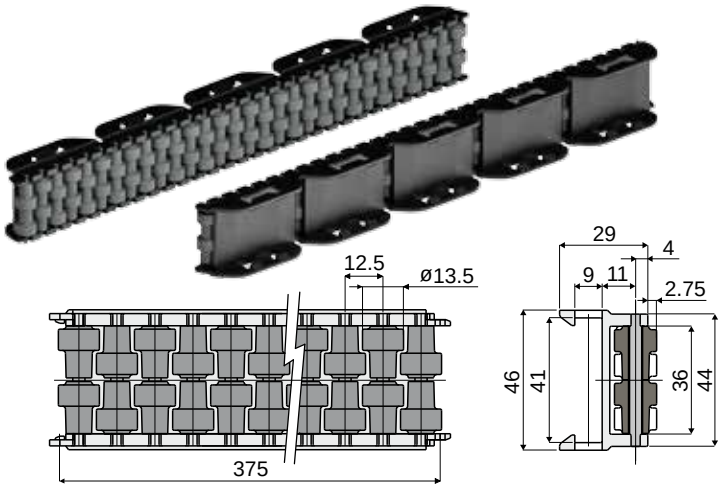

Pins made of acetal	Pins made of stainless steel AISI 304
Code	Code
344 / 83372	344 / 86719

NEW

MATERIALS: Rollers in polyethylene grey colour; modules in acetal resin black colour; support pins in black acetal or in stainless steel AISI 304.
FEATURES: Supplied already assembled, in modules of 375 mm length, for 40x8 mm plate.
Min. curvature radius: ext = 500 mm; int. = 350 mm
BOX QUANTITY: 12 pieces.
ON REQUEST:
- **Module and rollers:** can be produced in other colours.
- **Box quantity:** According to your request.

Example of application

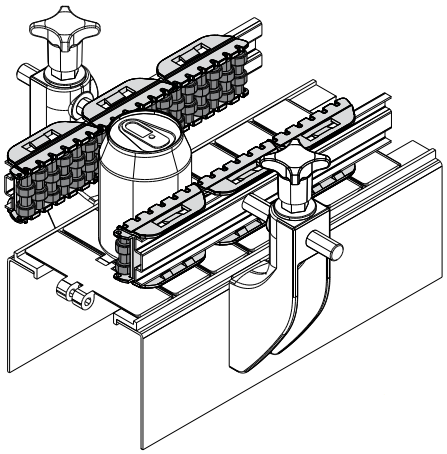

Part. 421 Roller side guide (double type, with small cylinders)
(375 mm modules)

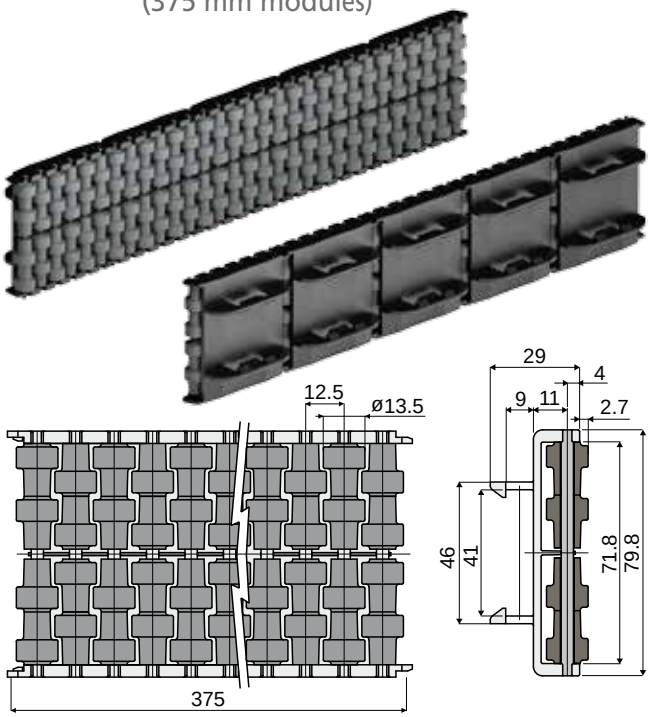

Pins made of acetal	Pins made of stainless steel AISI 304
Code	Code
421 / 84816	421 / 85274

NEW

MATERIALS: Rollers in polyethylene grey colour; modules in acetal resin black colour; support pins in black acetal or in stainless steel AISI 304.
FEATURES: Supplied already assembled, in modules of 375 mm length, for 40x8 mm plate.
MIN. CURVATURE RADIUS:ext = 500 mm; int. = 350 mm.
BOX QUANTITY: 12 pieces.
ON REQUEST:
- **Module and rollers:** Can be produced in other colours.
- **Box quantity:** According to your request.

Example of application

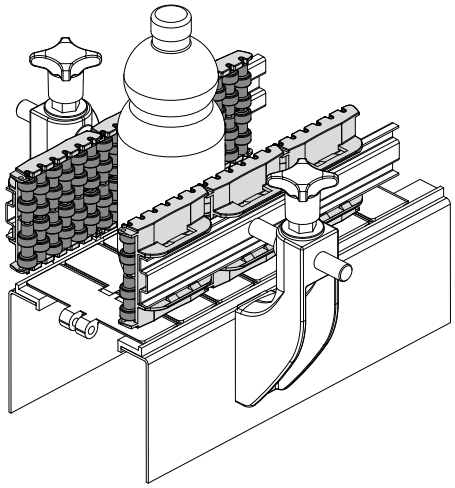

Product guides and accessories

Example of application

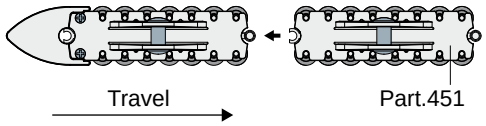

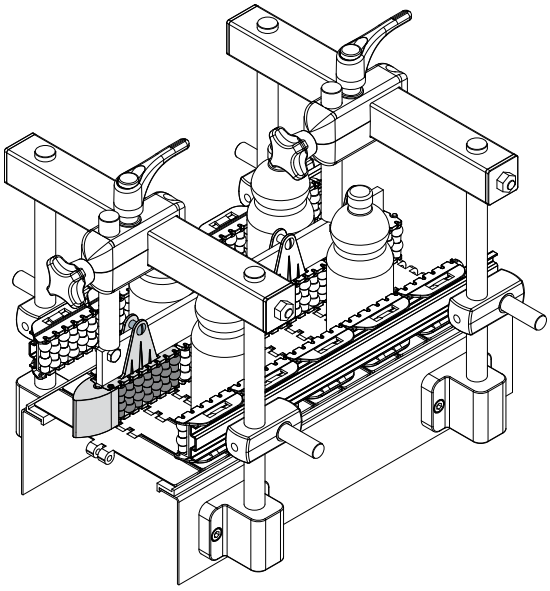

Example of application

Fixing with plate

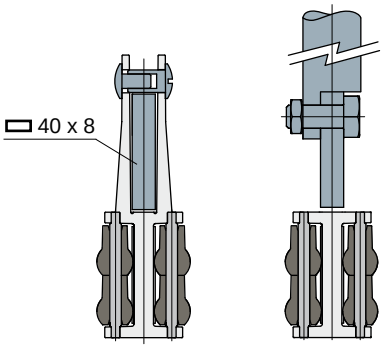

Fixing with metal profile

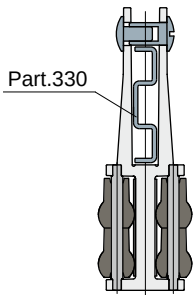

Separation Block with pearls
(for Part.451)

Part. **448**

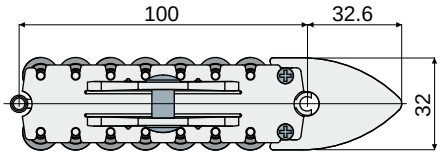

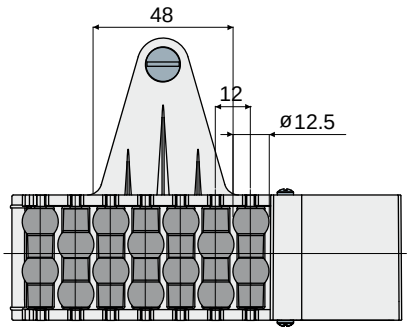

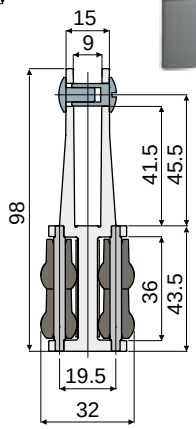

NEW

Pins made of acetal	Pins made of stainless steel AISI 304
Codice	Codice
448 / 85374	448 / 85459

MATERIALS: Rollers in polyethylene grey colour; module in acetal resin black colour; shoe in acetal resin grey colour; support pins in black acetal or in stainless steel AISI 304.
FEATURES: Supplied already assembled (1 module + 1 shoe); for 40x8 mm plate.
BOX QUANTITY: 2 pieces.
ON REQUEST:
- **Module and rollers:** Can be produced in other colours.
- **Box quantity:** According to your request.

Roller central guide with pearls
(500 mm modules)

Part. **451**

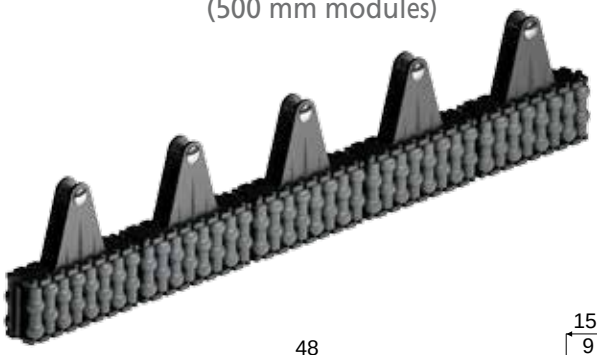

NEW

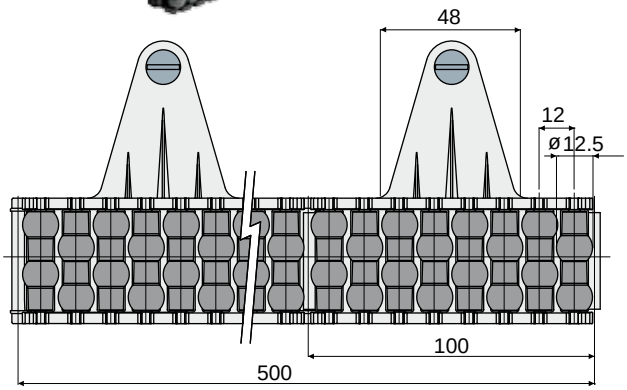

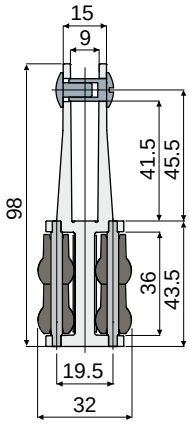

Pins made of acetal	Pins made of stainless steel AISI 304
Codice	Codice
451 / 85377	451 / 85467

MATERIALS: Rollers in polyethylene grey colour; modules in acetal resin black colour; support pins in black acetal or in stainless steel AISI 304.
FEATURES: Supplied already assembled, in modules of 500 mm length, for 40x8 mm plate. Min. curvature radius: 335 mm.
BOX QUANTITY: 12 pieces.
ON REQUEST:
- **Module and rollers:** Can be produced in other colours.
- **Box quantity:** According to your request.

Product guides and accessories

Part. 449 Separation Block with cylinders

(for Part.452)

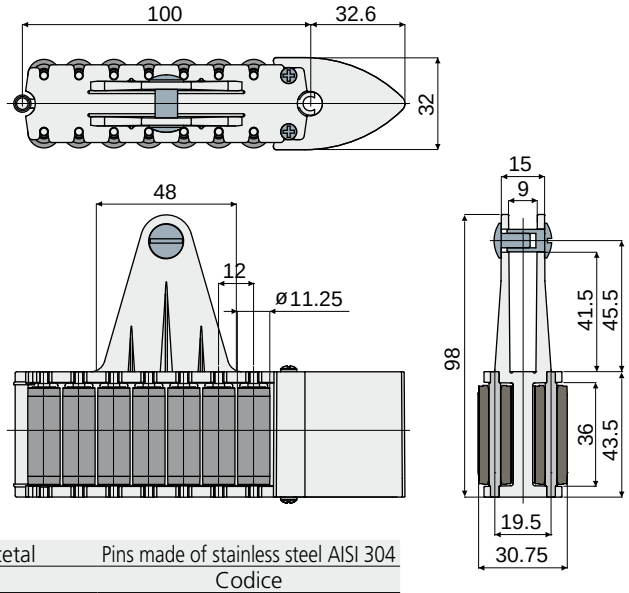

Pins made of acetal	Pins made of stainless steel AISI 304
Codice	Codice
449 / 85375	449 / 85460

MATERIALS: Rollers in polyethylene grey colour; module in acetal resin black colour; shoe in acetal resin grey colour; support pins in black acetal or in stainless steel AISI 304.
FEATURES: Supplied already assembled (1 module + 1 shoe); for 40x8 mm plate.
BOX QUANTITY: 2 pieces.
ON REQUEST:
- **Module and rollers:** Can be produced in other colours.
- **Box quantity:** According to your request.

Example of application

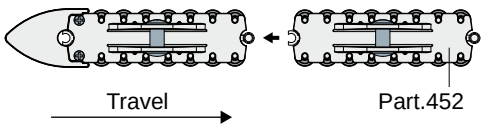

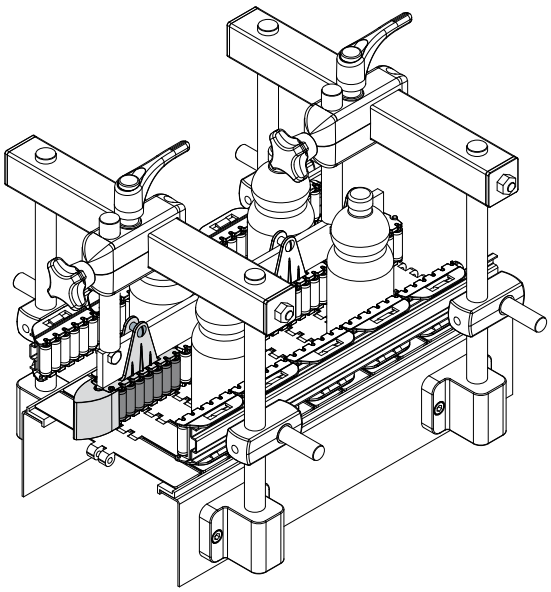

Example of application

Part. 452 Roller central guide with cylinders

(500 mm modules)

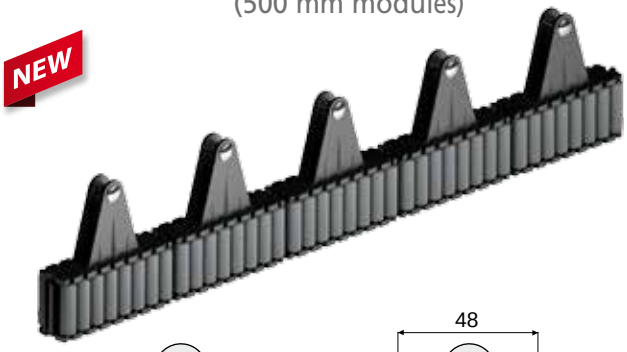

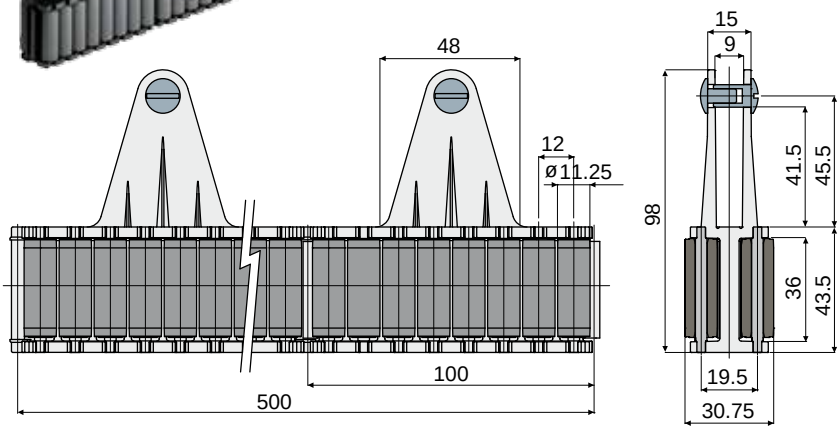

Pins made of acetal	Pins made of stainless steel AISI 304
Codice	Codice
452 / 85378	452 / 85468

MATERIALS: Rollers in polyethylene grey colour; modules in acetal resin black colour; support pins in black acetal or in stainless steel AISI 304.
FEATURES: Supplied already assembled, in modules of 500 mm length, for 40x8 mm plate.
Min. curvature radius: 335 mm.
BOX QUANTITY: 12 pieces.
ON REQUEST:
- **Module and rollers:** Can be produced in other colours.
- **Box quantity:** According to your request.

Fixing with plate

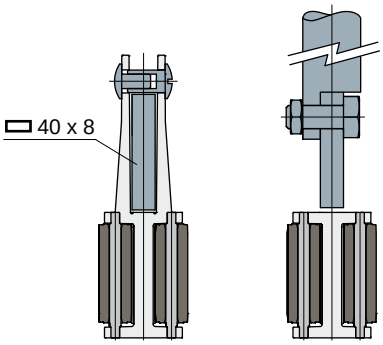

Fixing with metal profile

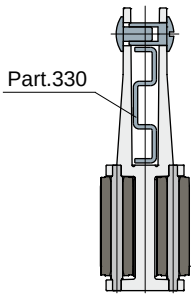

Product guides and accessories

Example of application

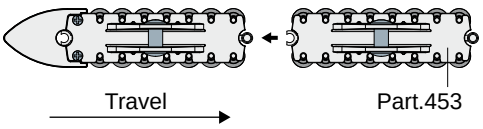

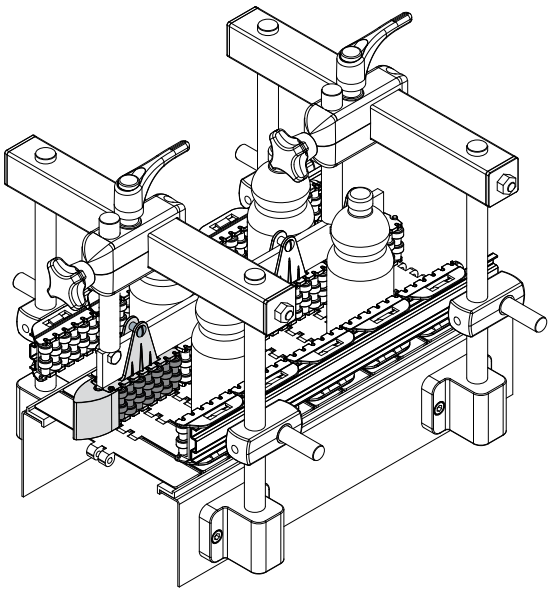

Example of application

Fixing with plate

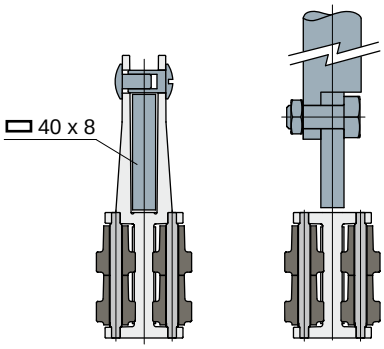

Fixing with metal profile

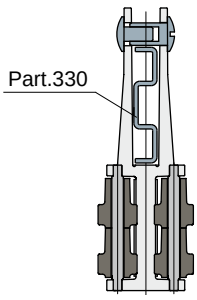

Separation Block with small cylinders

(for Part.453)

Part. **450**

NEW

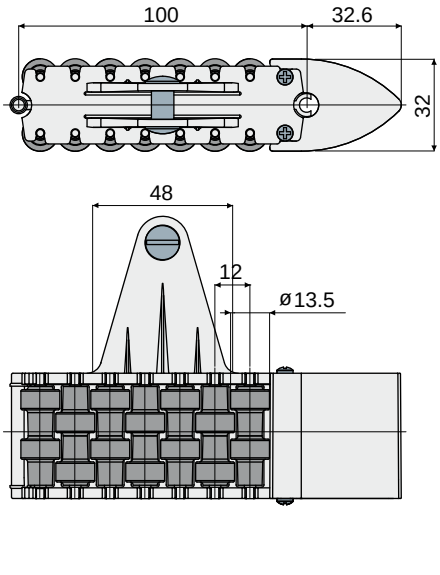

Pins made of acetal	Pins made of stainless steel AISI 304
Code	Code
450 / 85376	**450 / 85461**

MATERIALS: Rollers in polyethylene grey colour; module in acetal resin black colour; shoe in acetal resin grey colour; support pins in black acetal or in stainless steel AISI 304.
FEATURES: Supplied already assembled (1 module + 1 shoe); for 40x8 mm plate.
BOX QUANTITY: 2 pieces.
ON REQUEST:
- **Module and rollers:** Can be produced in other colours.
- **Box quantity:** According to your request.

Roller central guide with small cylinders

(500 mm modules)

Part. **453**

NEW

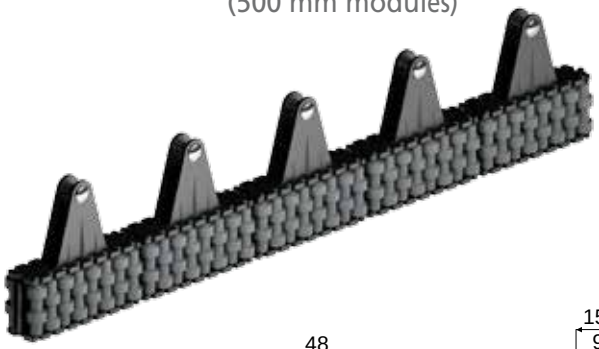

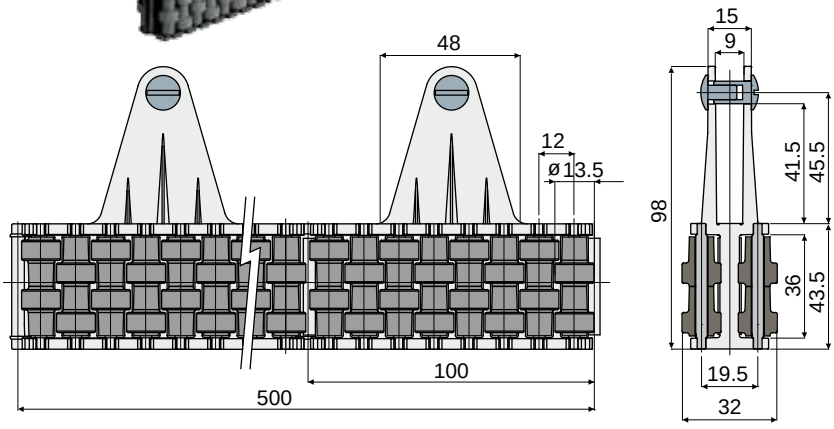

Pins made of acetal	Pins made of stainless steel AISI 304
Code	Code
453 / 85379	**453 / 85469**

MATERIALS: Rollers in polyethylene grey colour; modules in acetal resin black colour; support pins in black acetal or in stainless steel AISI 304.
FEATURES: Supplied already assembled, in modules of 500 mm length, for 40x8 mm plate. Min. curvature radius: 335 mm.
BOX QUANTITY: 12 pieces.
ON REQUEST:
- **Module and rollers:** Can be produced in other colours.
- **Box quantity:** According to your request.

Product guides and accessories

Part. 388 Roller for transfer plates

(for Part. 257, 258, 259, 260, 261, 262, 416, 417, 430, 431, 432, 433)

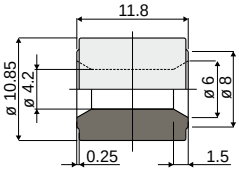

Code
388 / 84131

MATERIALS: Roller made of acetalic resin, grey colour.
BOX QUANTITY: 480 pieces.
ON REQUEST:
- Rollers: In different colours.
- Box quantity: According to your request.

Example of application

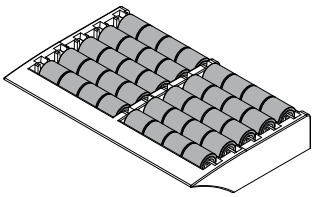

Part. 393 Roller for roller guides

(for Part. 306, 307, 308, 319, 345, 423, 448, 451)

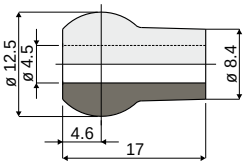

Code
393 / 84182

MATERIALS: Roller made of acetalic resin, grey colour.
BOX QUANTITY: 480 pieces.
ON REQUEST:
- Rollers: In different colours.
- Box quantity: According to your request.

Example of application

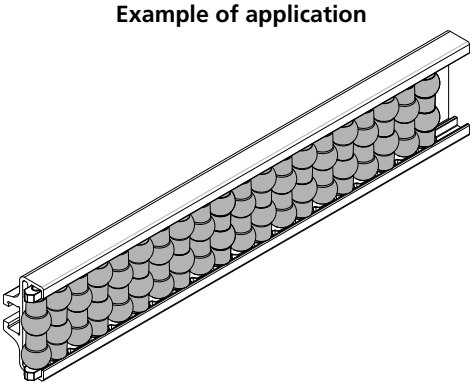

Part. 394 Roller for roller guides

(for Part. 344, 355, 356, 357, 358, 421, 450, 453)

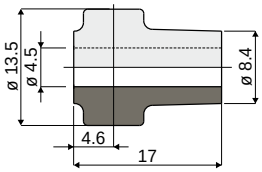

Code
394 / 84183

MATERIALS: Roller made of acetalic resin, grey colour.
BOX QUANTITY: 480 pieces.
ON REQUEST:
- Rollers: In different colours.
- Box quantity: According to your request.

Example of application

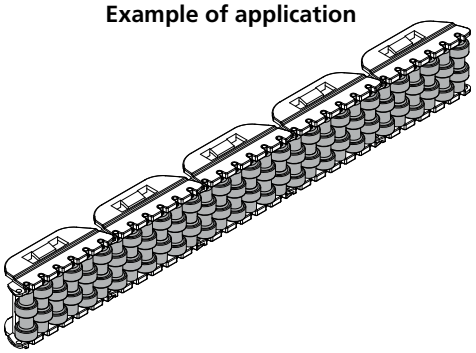

Part. 395 Roller for roller guides

(for Part. 325, 326, 327, 328, 339, 422, 449, 452)

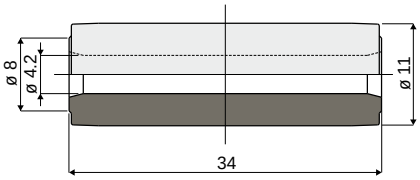

Code
395 / 84185

MATERIALS: Roller made of acetalic resin, grey colour.
BOX QUANTITY: 480 pieces.
ON REQUEST:
- Rollers: In different colours.
- Box quantity: According to your request.

Example of application

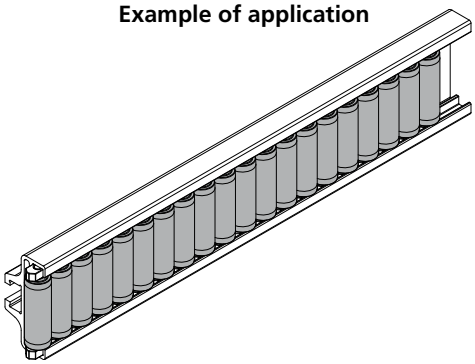

Product guides and accessories

Profiles for side guides Part. 330

Example of application

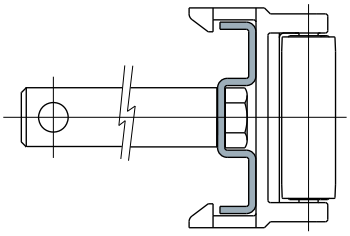

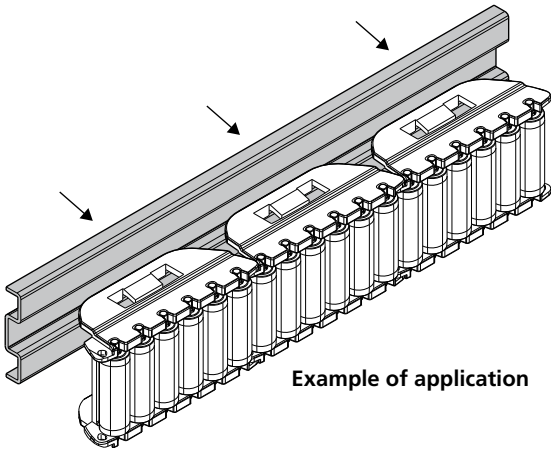

Example of application

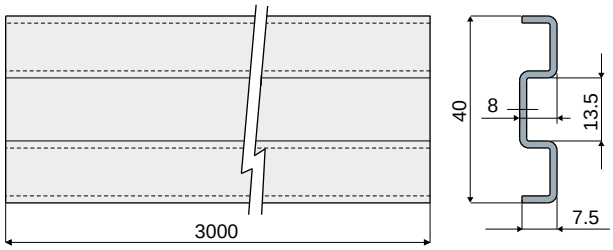

Stainless steel AISI 304	Stainless steel AISI 430
Code	Code
330 / 83089	330 / 83021

MATERIALS: Profiles in stainless steel AISI 430 or AISI 304.
FEATURES: Supplied in bars of 3 meters length.
To be used with side guide Part.345, 423, 339, 422, 344, 421.
BOX QUANTITY: 2 bars of 3 meters (total 6 meters).
ON REQUEST:

- Box quantity: According to your request.

Profile for side guides Part. 375

Example of application

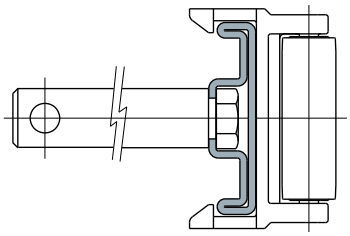

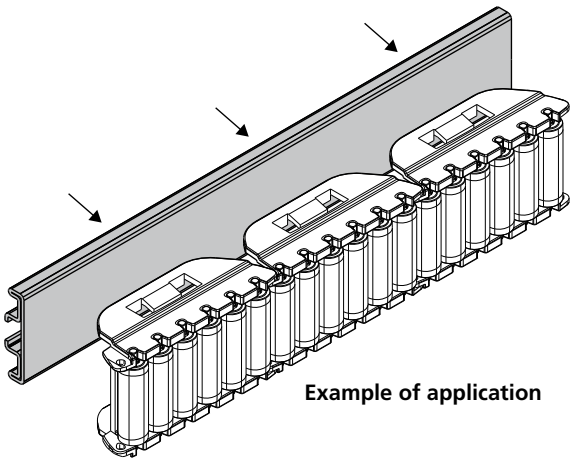

Example of application

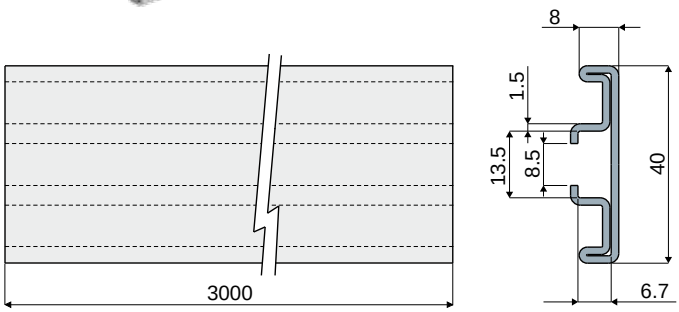

Code
375 / 83890

MATERIALS: Profiles in stainless steel AISI 304.
FEATURES: Supplied in lengths of 3 meters.
To be used with side guide Part.345, 423, 339, 422, 344, 421.
BOX QUANTITY: 2 lengths of 3 meters each (total 6 meters).
ON REQUEST:

- Box quantity: According to your request.

Product guides and accessories

Part. 426 Profile
(for the product side guide)

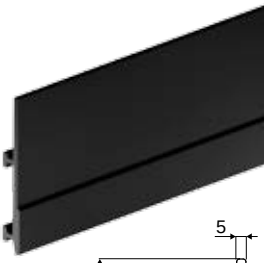

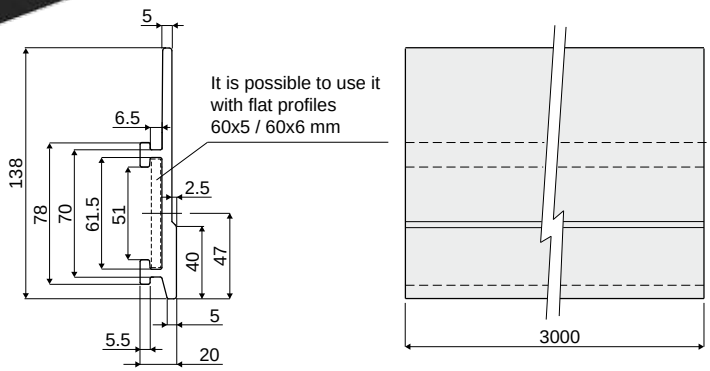

Code	Colour	L
426 / 84994	Black	3 Mt.
426 / 84995	Black	6 Mt.
426 / 84996	Blue (Ral 5005)	3 Mt.
426 / 84997	Blue (Ral 5005)	6 Mt.

MATERIALS: Profile in HMWPE.
FEATURES: Supplied in lengths of 3 or 6 Mt. To be assembled with clamps Part. 427, 434.
BOX QUANTITY: 2 lengths of 6 Mt (total 12 Mt), or 2 lengths of 3 Mt (total 6 Mt.).
ON REQUEST:
- **Profiles:** In different colours and sizes.
- **Box quantity:** According to your request.

Example of application

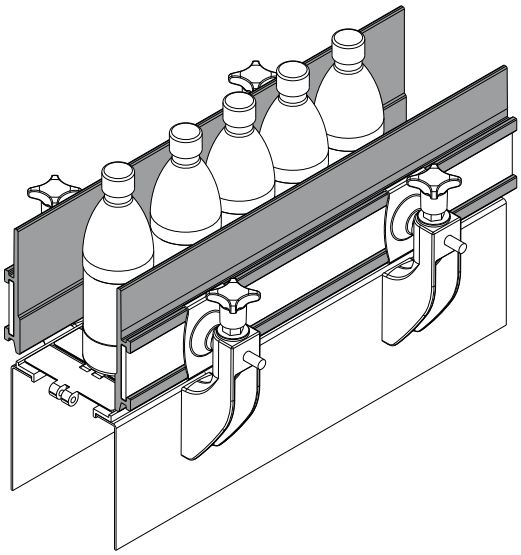

Part. 425 Profile
(for the product side guide)

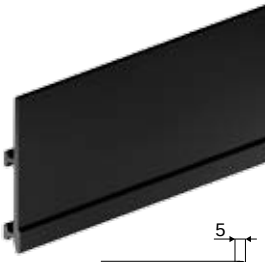

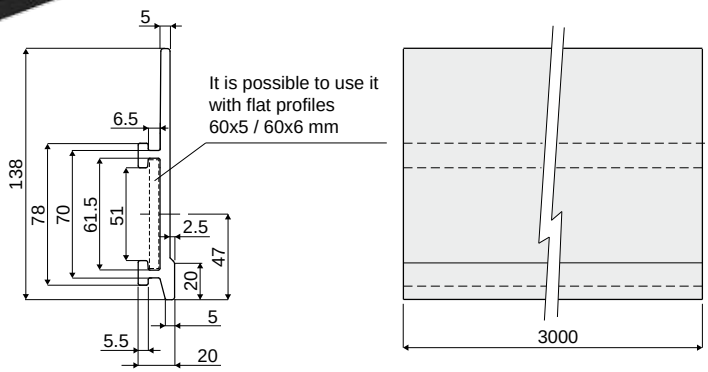

Code	Colour	L
425 / 84998	Black	3 Mt.
425 / 84999	Black	6 Mt.
425 / 85000	Blue RAL 5005	3 Mt.
425 / 85001	Blue RAL 5005	6 Mt.

MATERIALS: Profile in HMWPE.
FEATURES: Supplied in lengths of 3 or 6 Mt. To be assembled with clamps Part. 427, 434.
BOX QUANTITY: 2 lengths of 6 Mt (total 12 Mt), or 2 lengths of 3 Mt (total 6 Mt.).
ON REQUEST:
- **Profiles:** In different colours and sizes.
- **Box quantity:** According to your request.

Example of application

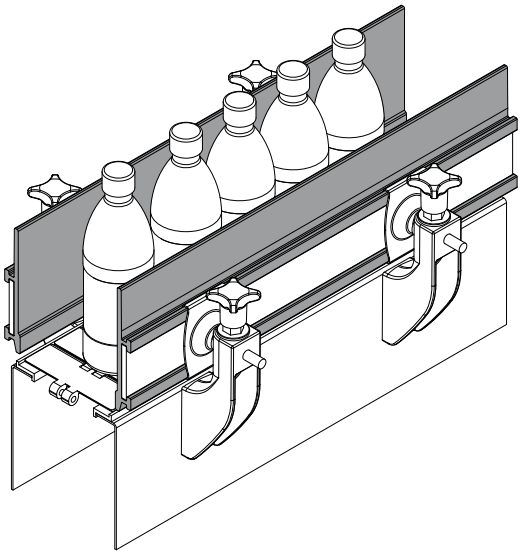

Product guides and accessories

Guide rail (round)
(with metal profile)

Part. **373**

Example of application

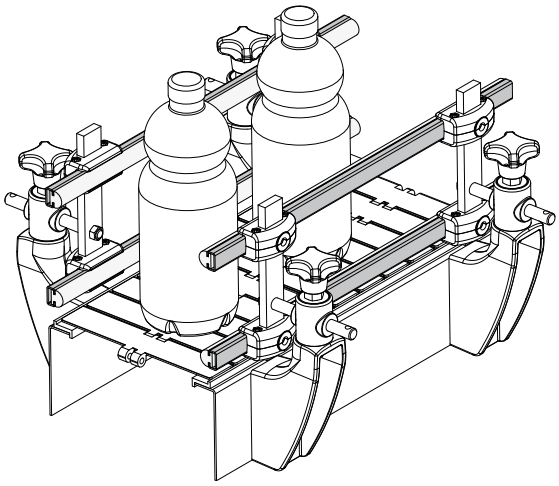

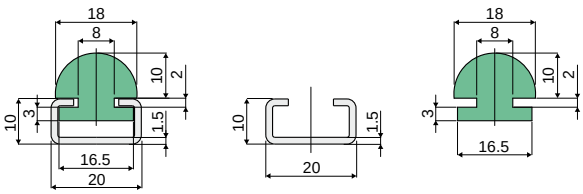

With profile and guide | Only profile | Only guide

Length	With profile and guide	
	Metal profile in zinc plated steel	Metal profile in stainless steel AISI 304
	Code	Code
3 Mt.	**373 / 83732**	**373 / 83733**
6 Mt.	**373 / 83734**	**373 / 83735**

Length	Only profile	
	Metal profile in zinc plated steel	Metal profile in stainless steel AISI 304
	Code	Code
3 Mt.	**373 / 83879**	**373 / 84303**

Length	Only guide
	Code
3 Mt.	**373 / 83882**

MATERIALS: Extruded HMWPE green colour, metal profile in stainless steel AISI 304 or zinc plated.
STANDARD PACKING:
- **3 Mt. lengths version:** This item is sold in Mt. - min. 6 Mt. (2 lengths);
- **6 Mt. lengths version:** This item is sold in Mt. - min. 12 Mt. (2 lengths).

Guide rail (round)
(with metal profile)

Part. **354**

Example of application

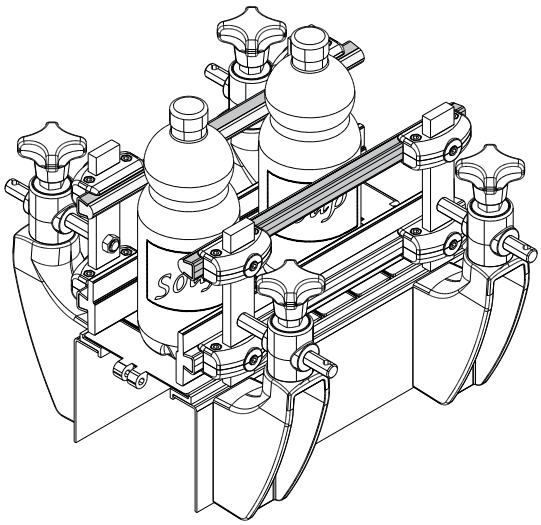

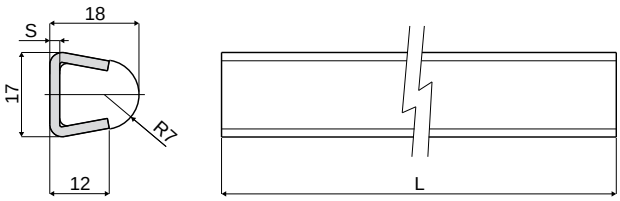

Code	Colour	S	L
354 / 84198	polyethylene natural	1,5	6000
354 / 84199	polyethylene natural	1,5	3000
354 / 83442	polyethylene natural	2	6000
354 / 83626	polyethylene natural	2	3000
354 / 85484	blue RAL 5005	1,5	6000
354 / 86726	blue RAL 5005	1,5	3000
354 / 85488	blue RAL 5005	2	6000
354 / 85486	blue RAL 5005	2	3000

NEW

MATERIALS: Plastic profile in polyethylene natural or blue colour;
metal profile in stainless steel AISI 304.
FEATURES: Supplied already assembled in lengths of 3 or 6 meters.
BOX QUANTITY: 2 bars of 6 mts. (total 12 mts.), or 2 bars of 3 mts. (total 6 mts.).
ON REQUEST:
- **Box quantity:** According to your request.

Product guides and accessories

Part. 420 Side guide rail, flat type
(with metal profile)

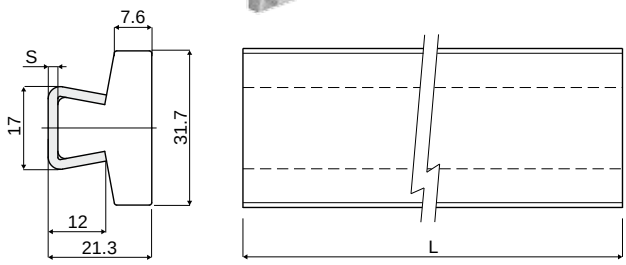

Code	S	L
420 / 84808	1,5	6000
420 / 84810	1,5	3000
420 / 84809	2	6000
420 / 84811	2	3000

MATERIALS: Guide profile in natural polyethylene; metal profile in stainless steel AISI 304.
FEATURES: Supplied in lengths of 3 or 6 Mt.
BOX QUANTITY: 2 lengths of 6 Mt (total 12 Mt), or 2 lengths of 3 Mt (total 6 Mt.).
ON REQUEST:
- Box quantity: According to your request.

Example of application

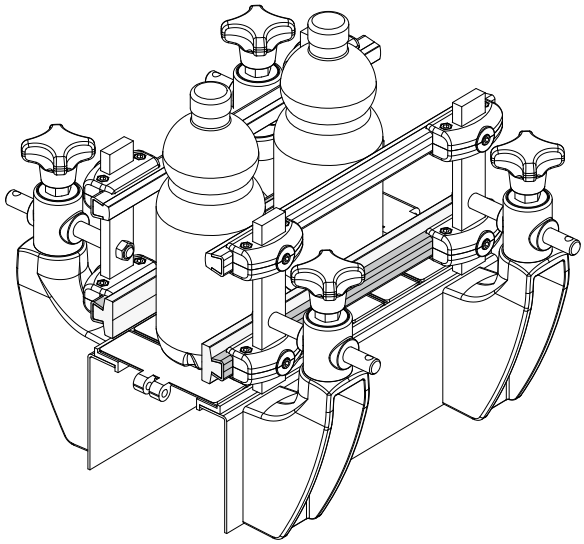

Part. 353 Guide rail
(with metal profile)

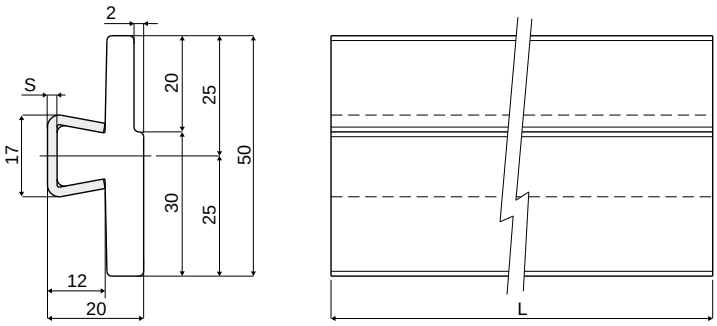

Code	S	L
353 / 84196	1,5	6000
353 / 84197	1,5	3000
353 / 83441	2	6000
353 / 83881	2	3000

MATERIALS: Plastic profile in polyethylene natural colour; metal profile in stainless steel AISI 304.
FEATURES: Supplied already assembled in lengths of 3 or 6 meters.
BOX QUANTITY: 2 bars of 6 mts. (total 12 mts.), or 2 bars of 3 mts. (total 6 mts.).
ON REQUEST:
- Box quantity: According to your request.

Example of application

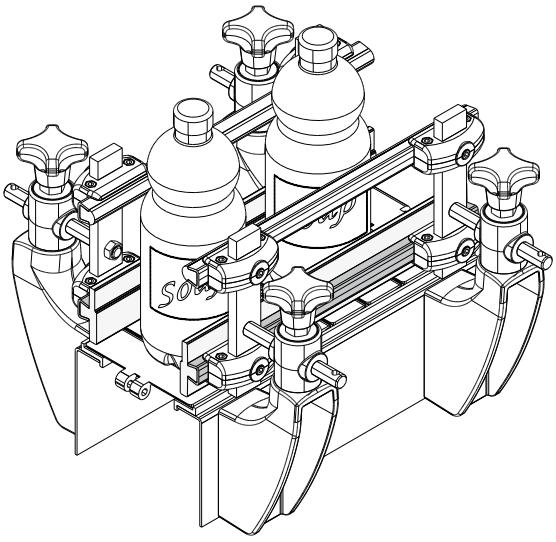

Product guides and accessories

Example of application

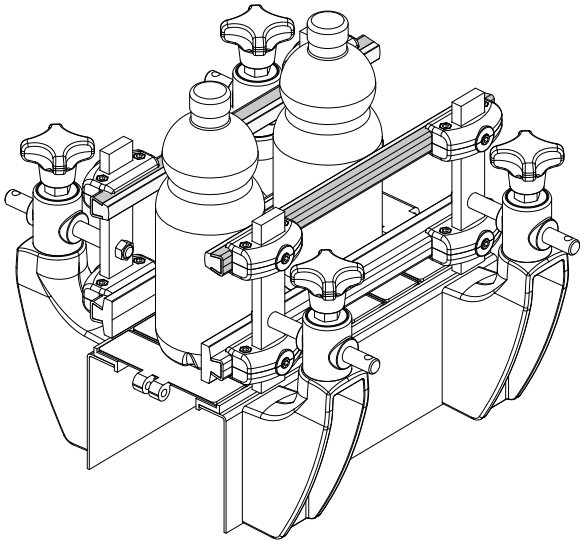

Product guide rail (with metal profile) Part. 419

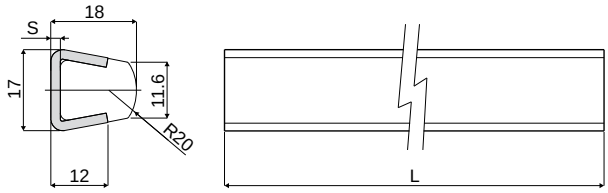

Code	S	L
419 / 84804	1,5	6000
419 / 84806	1,5	3000
419 / 84805	2	6000
419 / 84807	2	3000

MATERIALS: Guide profile in natural polyethylene; metal profile in stainless steel AISI 304.
FEATURES: Supplied in lengths of 3 or 6 Mt.
BOX QUANTITY: 2 lengths of 6 Mt (total 12 Mt), or 2 lengths of 3 Mt (total 6 Mt.).
ON REQUEST:

- **Box quantity:** According to your request.

Example of application

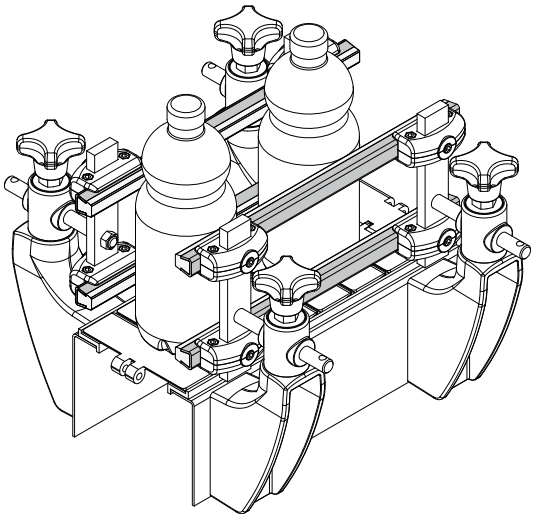

Product guide rail (with metal profile) Part. 418

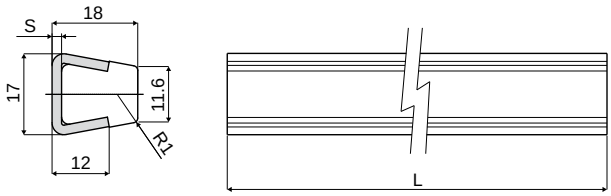

Code	S	L
418 / 84800	1,5	6000
418 / 84802	1,5	3000
418 / 84801	2	6000
418 / 84803	2	3000

MATERIALS: Guide profile in natural polyethylene; metal profile in stainless steel AISI 304.
FEATURES: Supplied in lengths of 3 or 6 Mt.
BOX QUANTITY: 2 lengths of 6 Mt (total 12 Mt), or 2 lengths of 3 Mt (total 6 Mt.).
ON REQUEST:

- **Box quantity:** According to your request.

Example of application

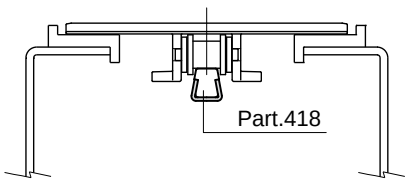

Product guides and accessories

Part. 438 Guide rail (semicircular)

NEW

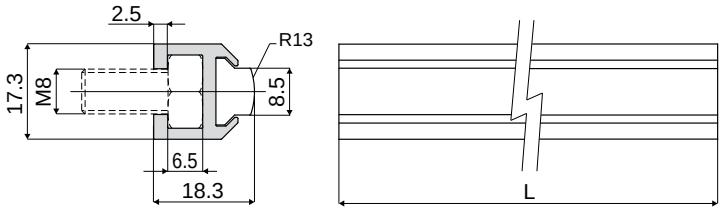

Code	L
438 / 85237	3000
438 / 85238	6000

MATERIALS: Guide profile in UHMWPE white colour, metal profile in anodized aluminium.
BOX QUANTITY: 2 lengths of 6 mts. (total 12 mts.), or 2 lengths of 3 mts. (total 6 mts.).
ON REQUEST:

- Box quantity: According to your request.

Example of application

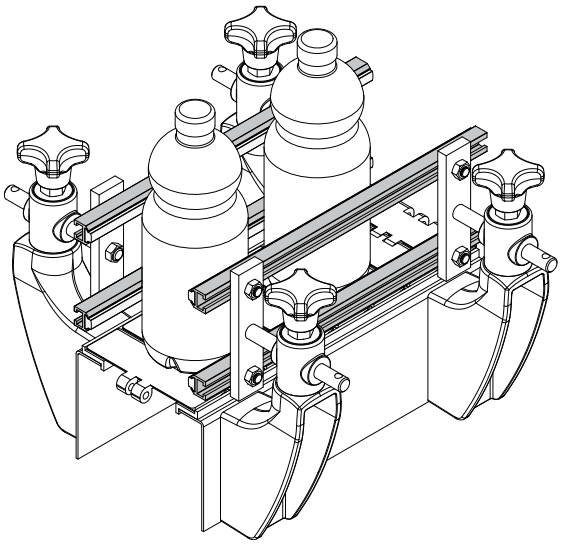

Product guides and accessories

Extruded product guide rails in coils of 50 Mt. Part. 370

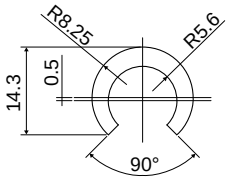

Code
370 / 83726

MATERIALS: Extruded HMWPE white colour.
STANDARD PACKING: This item is sold in Mt. - min. 50 Mt.
FEATURES: To be used with 10 mm diameter rods.
ON REQUEST:
- Guide rails: Different colours and lengths.

Extruded product guide rails in coils of 50 Mt. Part. 371

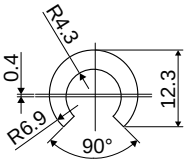

Code
371 / 83727

MATERIALS: Extruded HMWPE white colour.
STANDARD PACKING: This item is sold in Mt. - min. 50 Mt.
FEATURES: To be used with 8 mm diameter rods.
ON REQUEST:
- Guide rails: Different colours and lengths.

Extruded product guide rails in 6 Mt. lengths Part. 372

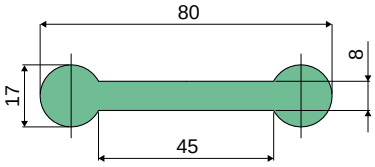

Code
372 / 83728

MATERIALS: Extruded HMWPE green colour.
STANDARD PACKING: This item is sold in Mt. - min. 12 Mt. (2 lengths).
ON REQUEST:
- Guide rails: Different colours and lengths.

Chain guides and accessories

Part. 361 Extruded profile supplied in coils of 50 / 60 Mt. For plates from 2 to 4 mm.

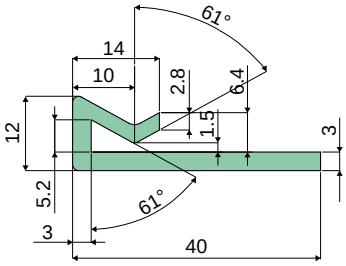

Code
361 / 83717

MATERIALS: Extruded UHMWPE green colour.
STANDARD PACKING: This item is sold in Mt. - min. 50 Mt.
ON REQUEST:
- **Guide profiles:** Different colours and lengths.

Part. 362 Extruded profile supplied in coils of 50 / 60 Mt. For plates from 2 to 4 mm.

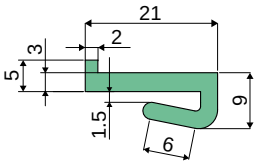

Code
362 / 83718

MATERIALS: Extruded UHMWPE green colour.
STANDARD PACKING: This item is sold in Mt. - min. 50 Mt.
ON REQUEST:
- **Guide profiles:** Different colours and lengths.

Part. 363 Extruded profile supplied in coils of 50 / 60 Mt. For plates from 2 to 4 mm.

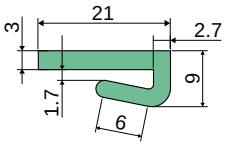

Code
363 / 83719

MATERIALS: Extruded UHMWPE green colour.
STANDARD PACKING: This item is sold in Mt. - min. 50 Mt.
ON REQUEST:
- **Guide profiles:** Different colours and lengths.

Part. 364 Extruded chain guide profiles for flat 30x3 mm. supplied in 3 Mt. lengths

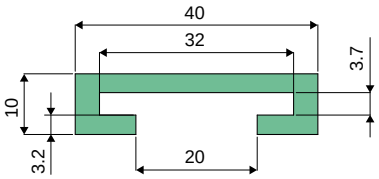

Code
364 / 83720

MATERIALS: Extruded UHMWPE green colour.
STANDARD PACKING: This item is sold in Mt. - min. 6 Mt. (2 lengths).
ON REQUEST:
- **Guide profiles:** Different colours and lengths.

Chain guides and accessories

Extruded chain guide profiles for flat 40x6 mm. supplied in 6 Mt. lengths

Part. **365**

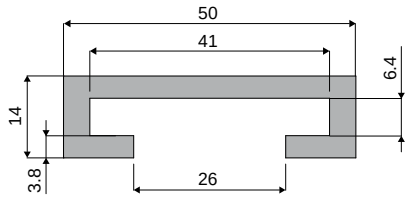

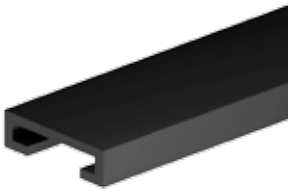

Code
365 / 83721

MATERIALS: Extruded UHMWPE black colour.
STANDARD PACKING: This item is sold in Mt. - min. 12 Mt. (2 lengths).
ON REQUEST:
- **Guide profiles:** Different colours and lengths.

Extruded chain guide profiles for flat 50x6 mm. supplied in 6 Mt. lengths

Part. **366**

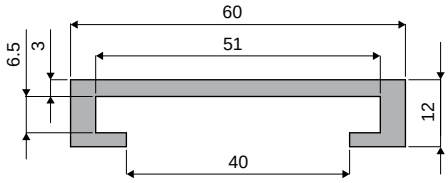

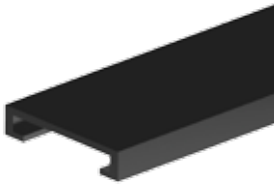

Code
366 / 83722

MATERIALS: Extruded UHMWPE black colour.
STANDARD PACKING: This item is sold in Mt. - min. 12 Mt. (2 lengths).
ON REQUEST:
- **Guide profiles:** Different colours and lengths.

Extruded chain guide profiles supplied in coils of 50 Mt.

Part. **367**

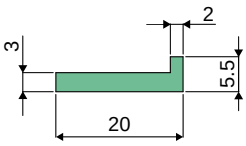

Code
367 / 83723

MATERIALS: Extruded UHMWPE green colour.
STANDARD PACKING: This item is sold in Mt. - min. 50 Mt.
ON REQUEST:
- **Guide profiles:** Different colours and lengths.

Extruded chain guide profiles supplied in coils of 50 Mt.

Part. **368**

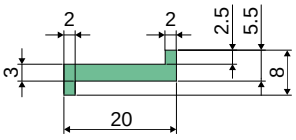

Code
368 / 83724

MATERIALS: Extruded UHMWPE green colour.
STANDARD PACKING: This item is sold in Mt. - min. 50 Mt.
ON REQUEST:
- **Guide profiles:** Different colours and lengths.

Extruded chain guide profiles supplied in coils of 50 Mt. For plates from 6 to 7 mm.

Part. **369**

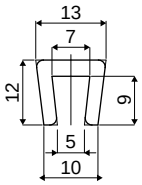

Code
369 / 83725

MATERIALS: Extruded UHMWPE white colour.
STANDARD PACKING: This item is sold in Mt. - min. 50 Mt.
ON REQUEST:
- **Guide profiles:** Different colours and lengths.

Chain guides and accessories

Part. 446 Guide rail
(with metal profile)

NEW

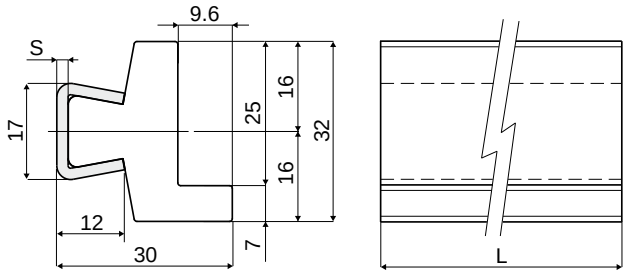

Code	S	L
446 / 85355	1,5	6000
446 / 85356	1,5	3000
446 / 85358	2	6000
446 / 85357	2	3000

MATERIALS: Plastic profile in polyethylene natural colour; metal profile in stainless steel AISI 304.
FEATURES: Supplied already assembled in lengths of 3 or 6 meters.
BOX QUANTITY: 2 bars of 6 mts. (total 12 mts.), or 2 bars of 3 mts. (total 6 mts.).
ON REQUEST:
- **Box quantity:** According to your request.

Example of application

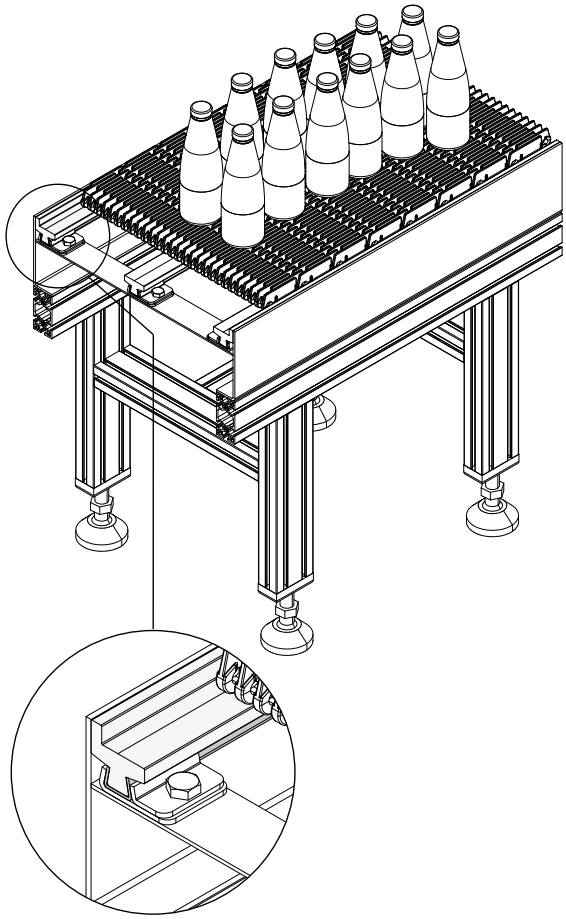

Chain guides and accessories

Example of application

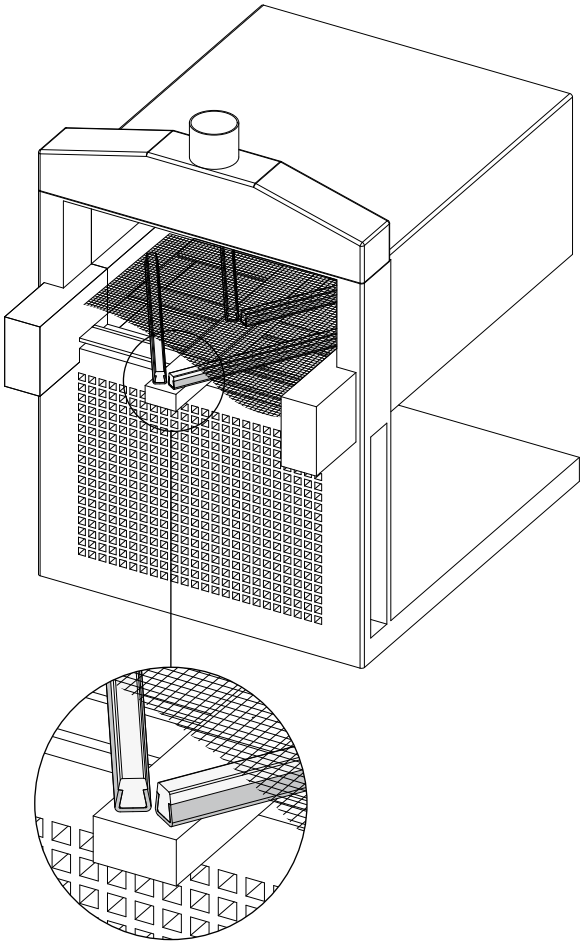

Guide rail for high temperatures
(with metal profile)

Part. **377**

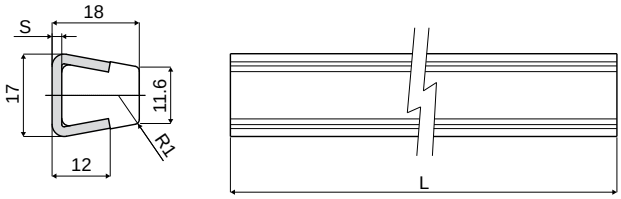

Code	S	L
377 / 85476	1,5	3000
377 / 83973	2	3000

NEW

MATERIALS: Guide profile in PTFE (Teflon) natural colour; metal profile in stainless steel AISI 304.
FEATURES: To be used in every application where the resistance to the high temperatures is needed; for example: ovens, fryers, filling areas with high temperature, steam rooms, kitchens etc. Supplied in 3 meters lengths.
BOX QUANTITY: 2 bars of 3 meters (total 6 meters).
ON REQUEST:

- **Box quantity:** According to your request.

Chain guides and accessories

Part. 381 Chain guide profile

Tipo 1

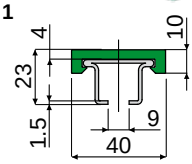

Tipo 2

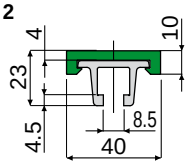

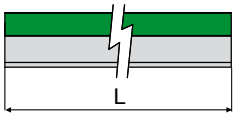

Type 1			
Metal profile in stainless steel AISI 304	Metal profile in stainless steel AISI 430		
Code	Code	Colour	L
381 / 84085	381 / 84086	Green	3 Mt.
381 / 84954	381 / 84955	Green	6 Mt.
381 / 84942	381 / 84946	White	3 Mt.
381 / 84943	381 / 84947	White	6 Mt.
381 / 84948	381 / 84952	Black	3 Mt.
381 / 84949	381 / 84953	Black	6 Mt.

Type 2		
Metal profile in aluminium		
Code	Colour	L
381 / 84474	Green	3 Mt.
381 / 84475	Green	6 Mt.
381 / 84944	White	3 Mt.
381 / 84945	White	6 Mt.
381 / 84950	Black	3 Mt.
381 / 84951	Black	6 Mt.

MATERIALS: Metal profile in stainless steel AISI 304, AISI 430 or aluminium; guide profile in polyethylene.
FEATURES: Supplied in lengths of 3 or 6 Mt.
BOX QUANTITY: 2 lengths of 6 Mt (total 12 Mt), or 2 lengths of 3 Mt (total 6 Mt.).
ON REQUEST:
- **Box quantity:** According to your request.

Part. 384 Chain guide profile

Tipo 1

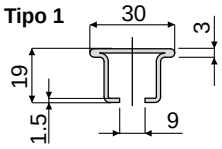

Tipo 2

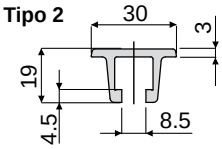

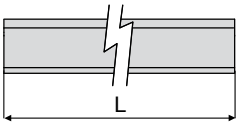

Type 1		
Metal profile in stainless steel AISI 304	Metal profile in stainless steel AISI 430	
Code	Code	L
384 / 84121	384 / 84122	3 Mt.
384 / 84956	384 / 84957	6 Mt.

Type 2	
Metal profile in aluminium	
Code	L
384 / 84476	3 Mt.
384 / 84477	6 Mt.

MATERIALS: Metal profile in stainless steel AISI 304, AISI 430 or aluminium.
FEATURES: Supplied in lengths of 3 or 6 Mt.
BOX QUANTITY: 2 lengths of 6 Mt (total 12 Mt), or 2 lengths of 3 Mt (total 6 Mt.).
ON REQUEST:
- **Box quantity:** According to your request.

Part. 385 Chain guide profile

Code	Colour	L
385 / 84123	Green	3 Mt.
385 / 84478	Green	6 Mt.
385 / 84940	White	3 Mt.
385 / 84577	White	6 Mt.
385 / 84941	Black	3 Mt.
385 / 84578	Black	6 Mt.

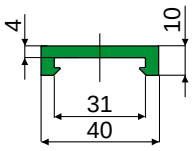

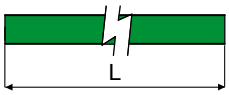

MATERIALS: Guide profile in polyethylene.
FEATURES: Supplied in lengths of 3 or 6 Mt.
BOX QUANTITY: 2 lengths of 6 Mt (total 12 Mt), or 2 lengths of 3 Mt (total 6 Mt.).
ON REQUEST:
- **Box quantity:** According to your request.

Example of application

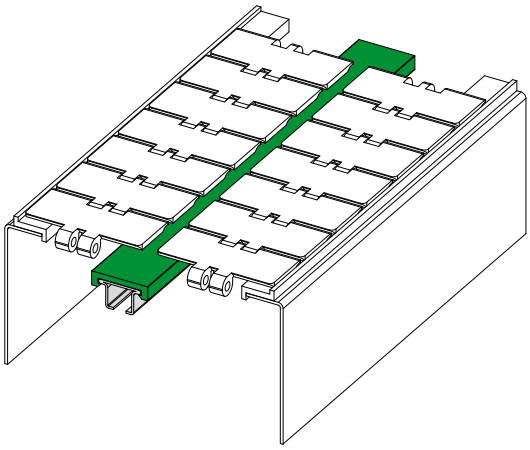

Chain guides and accessories

Example of application

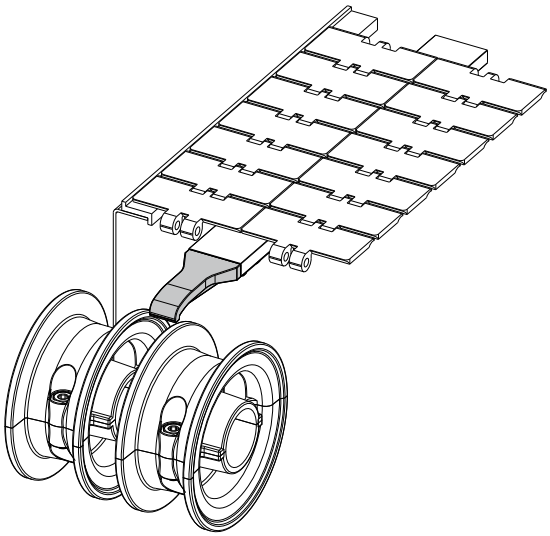

Chain inlet guide shoe (central) Part. 389

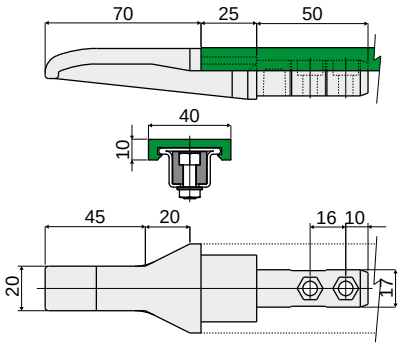

Code
389 / 84165

MATERIALS: Shoe in black polyamide.
FEATURES: To be assembled near to the idler wheels to drive the chain on the transport guides: Part.381, 384.
BOX QUANTITY: 24 pieces.
ON REQUEST:
- Shoes: In various colours.
- Box quantity: According to your request.

Example of application

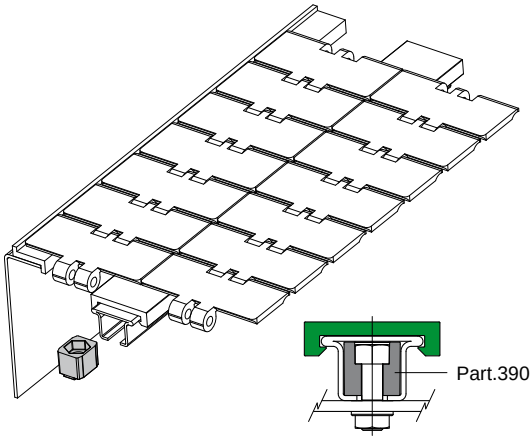

Mounting block for chain guide profile Part. 390

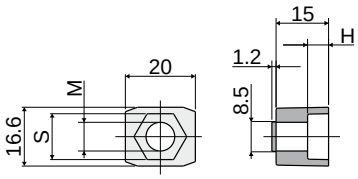

Code	M	H	S
390 / 84166	M6	4.5	10
390 / 84167	M8	6.0	13

MATERIALS: Mounting block in reinforced polyamide, black colour.
FEATURES: To be used for the guide fixing on the frame: Part.381, 384.
BOX QUANTITY: 96 pieces.
ON REQUEST:
- Mounting blocks: In various colours.
- Box quantity: According to your request.

Example of application

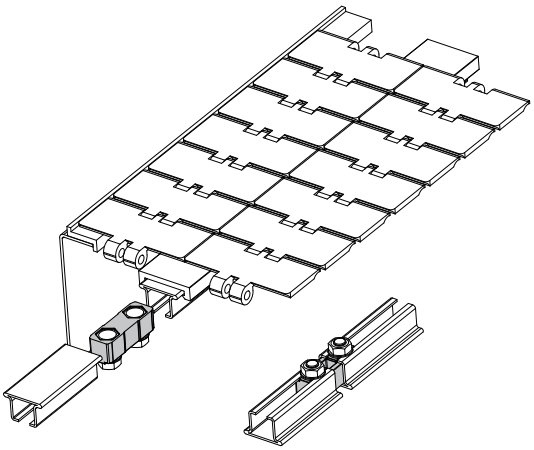

Connecting block for chain guide profile Part. 391

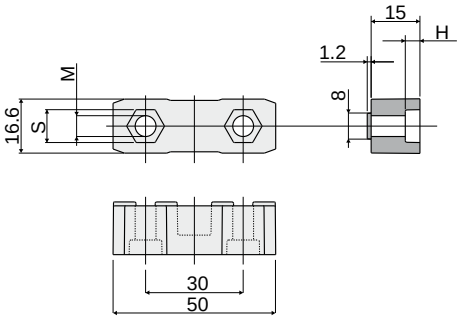

Code	M	H	S
391 / 84168	M6	4.5	10
391 / 84169	M8	6.0	13

MATERIALS: Connecting block in reinforced polyamide, black colour.
FEATURES: To be used to joint the guides: Part.381, 384.
BOX QUANTITY: 48 pieces.
ON REQUEST:
- Connecting blocks: In various colours.
- Box quantity: According to your request.

Chain guides and accessories

Part. 461 Hinge joint

NEW

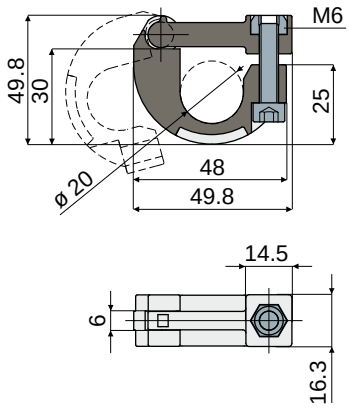

Code
461 / 85473

MATERIALS: Joint in reinforced polyamide black colour; bolts and nuts in stainless steel AISI 304.
FEATURES: To be used to join the guides Part.381, 384; supplied complete with bolts and nuts.
BOX QUANTITY: 8 pieces.
ON REQUEST:

- Joints: In other colours.
- Box quantity: According to your request.

Example of application

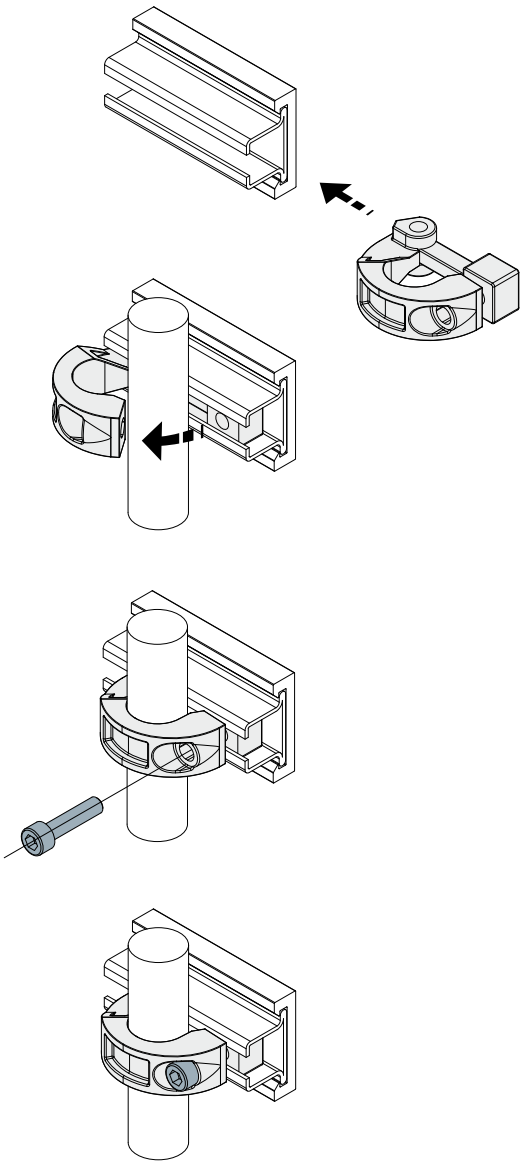

Chain guides and accessories

Example of application

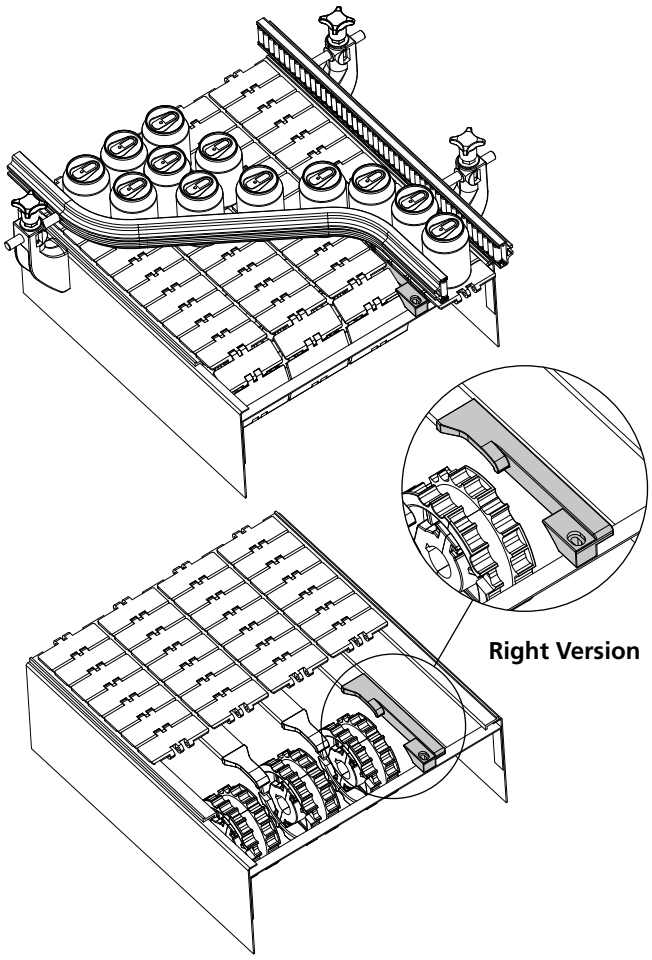

Example of application

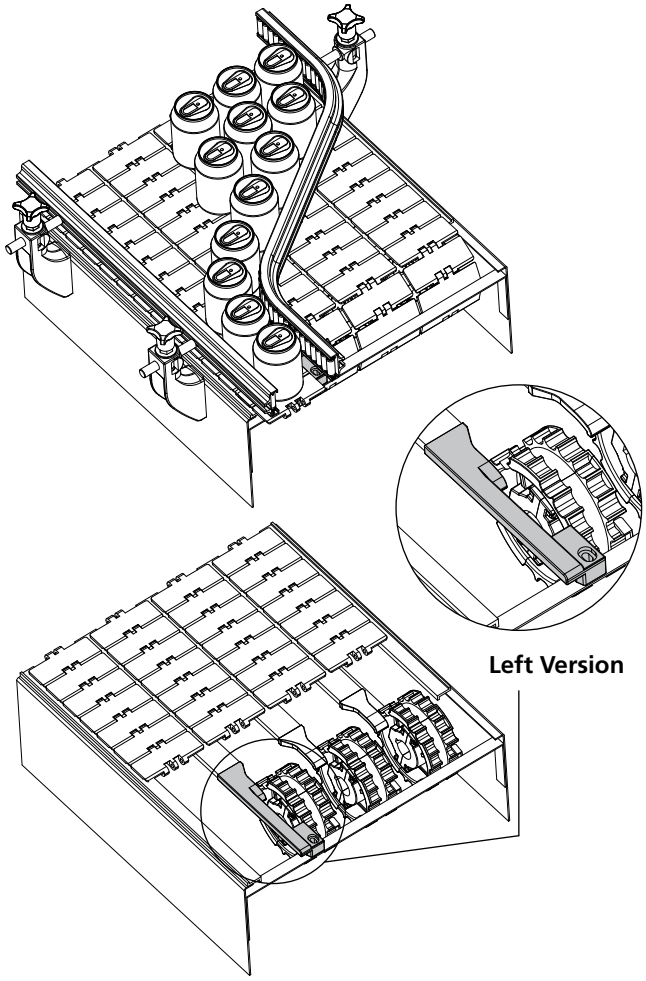

Chain inlet guide shoe (side)

Part. **444**

NEW

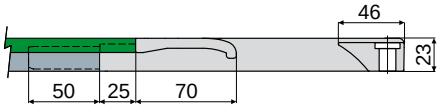

Right Version

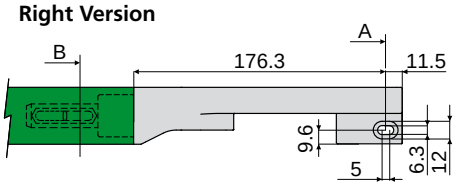

Left Version

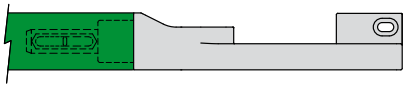

Section B

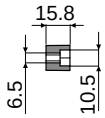

Section A

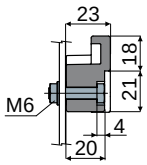

Version	Code
Right	**444 / 85308**
Left	**444 / 85309**

MATERIALS: Shoe in black polyamide.
FEATURES: To be assembled near to the idler wheels to drive the chain on the transport guides: Part.381, 384.
BOX QUANTITY: 24 pieces.
ON REQUEST:

- **Shoes:** In various colours.
- **Box quantity:** According to your request.

Accessories for the cross adjustment of the side guides

Part. 429 Spacer
(for conveyors' section)

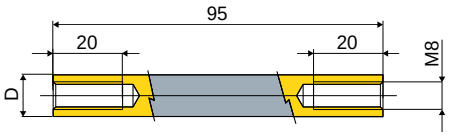

D (mm)	Code
12	429 / 85065
16	429 / 85066

MATERIALS: Spacers in Stainless steel AISI 304.
FEATURES: To be used to fix the frame in the conveyor system.
BOX QUANTITY: 24 pieces.
ON REQUEST:
- Box quantity: According to your request.

Example of application

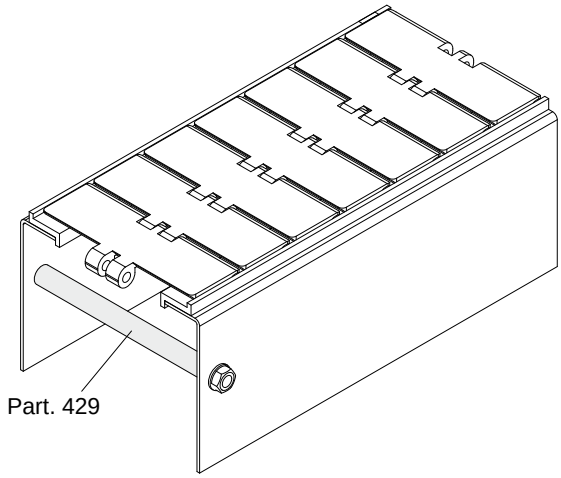

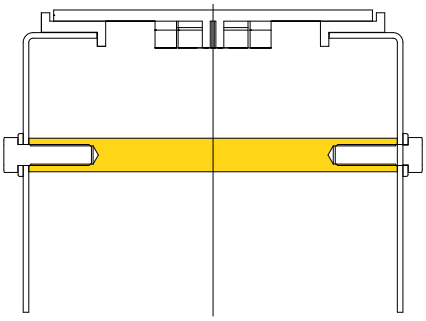

Part. 316 Spacer for rail-holder cylinder

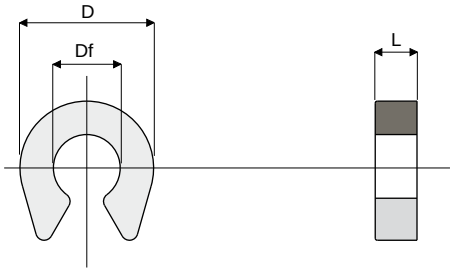

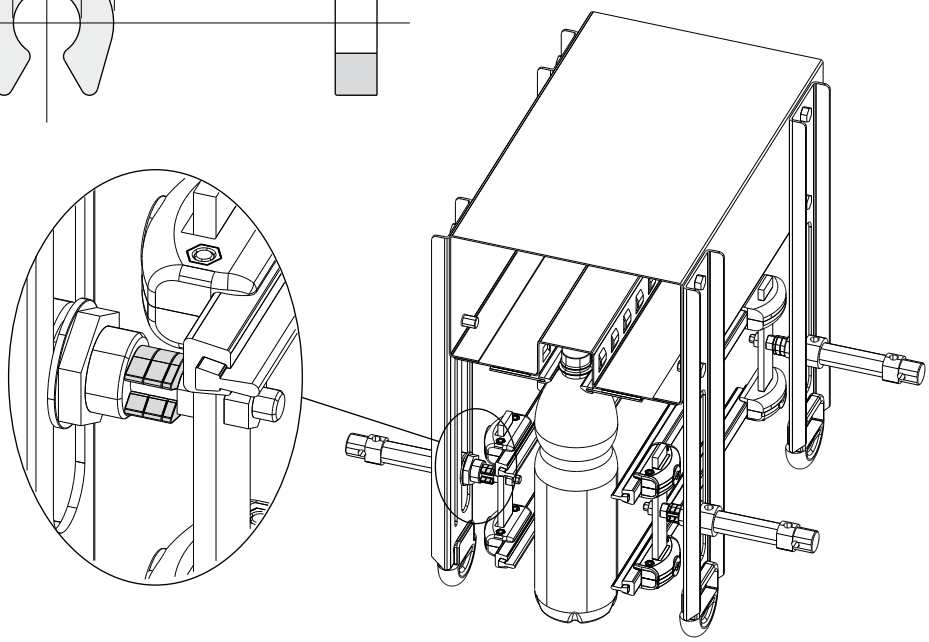

Df Bore diameter (mm)	D (mm)	L (mm)	Code
8	16	2,5	316 / 82871
8	16	5	316 / 82872

MATERIALS: Spacer made of polyamide black colour.
FEATURES: To be used as spacer for the stroke regulation of rail-holder pneumatic cylinder.
Snap-on assembly on 8 mm diameter spindles.
BOX QUANTITY: 96 pieces.
ON REQUEST:
- Spacers: With special bores and sizes.
- Box quantity: According to your request.

Example of application

Accessories for the cross adjustment of the side guides

Reference peg for size changing

Part. **331**

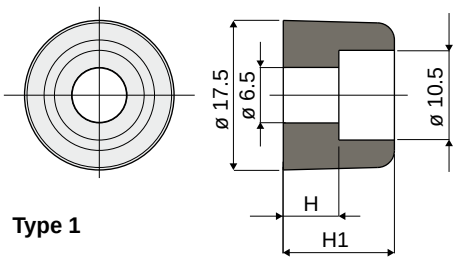

Type 1

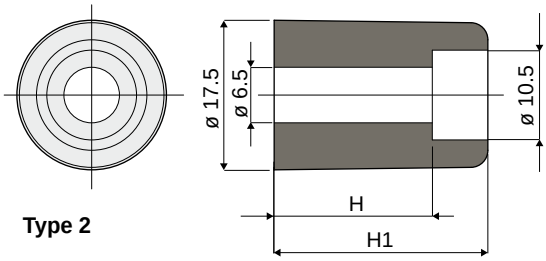

Type 2

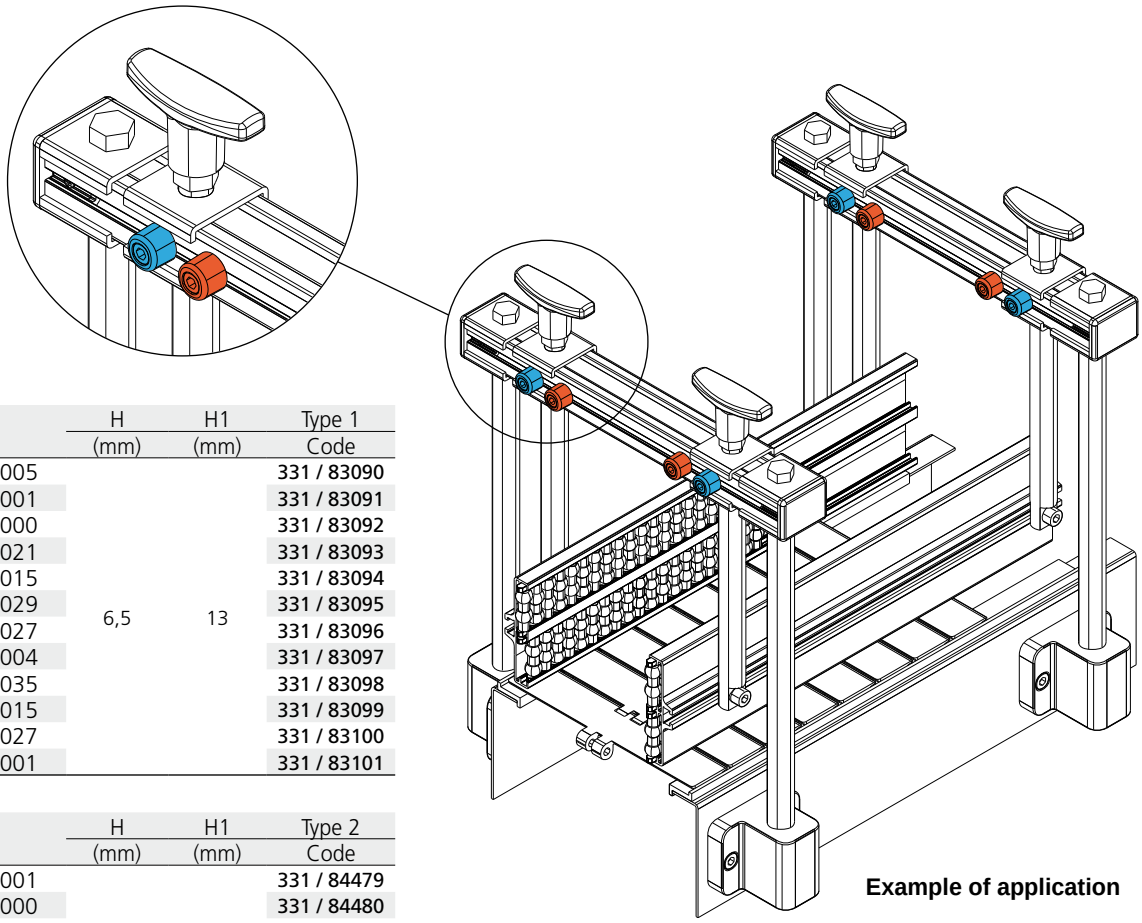

Example of application

Colour	H (mm)	H1 (mm)	Type 1 Code
Black RAL 9005	6,5	13	331 / 83090
White RAL 9001			331 / 83091
Red RAL 3000			331 / 83092
Yellow RAL 1021			331 / 83093
Blue RAL 5015			331 / 83094
Green RAL 6029			331 / 83095
Mustard RAL 1027			331 / 83096
Orange RAL 2004			331 / 83097
Grey RAL 7035			331 / 83098
Pink RAL 3015			331 / 83099
Light blue RAL 6027			331 / 83100
Brown RAL 8001			331 / 83101

Colour	H (mm)	H1 (mm)	Type 2 Code
White RAL 9001	18,5	25	331 / 84479
Red RAL 3000			331 / 84480
Yellow RAL 1021			331 / 84483
Blue RAL 5015			331 / 84482
Green RAL 6029			331 / 84481

MATERIALS: Peg in reinforced polypropylene.
FEATURES: To be used as a reference on the transport guides for size changing.
BOX QUANTITY: 96 pieces.
ON REQUEST:

- **Pegs:** Can be produced in other colours.
- **Box quantity:** According to your request.

Accessories for the cross adjustment of the side guides

Part. 352 Spacer for guide rail pin

Type 1

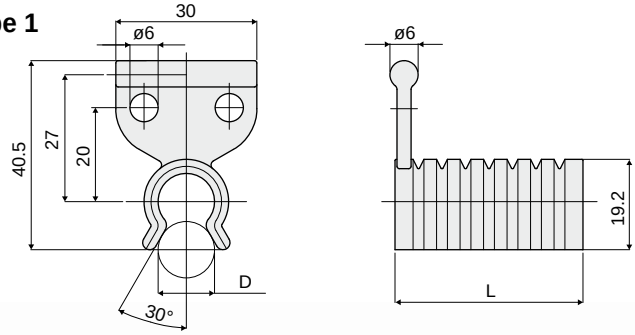

Type 2

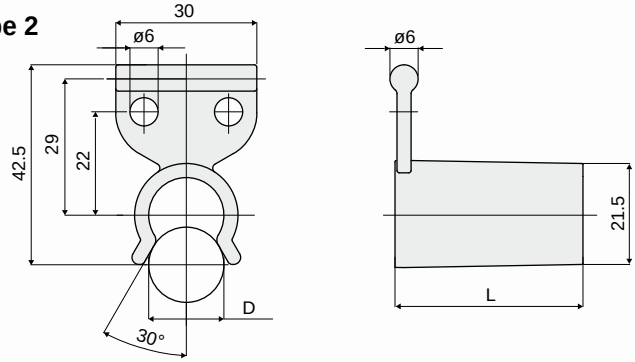

Example of applications

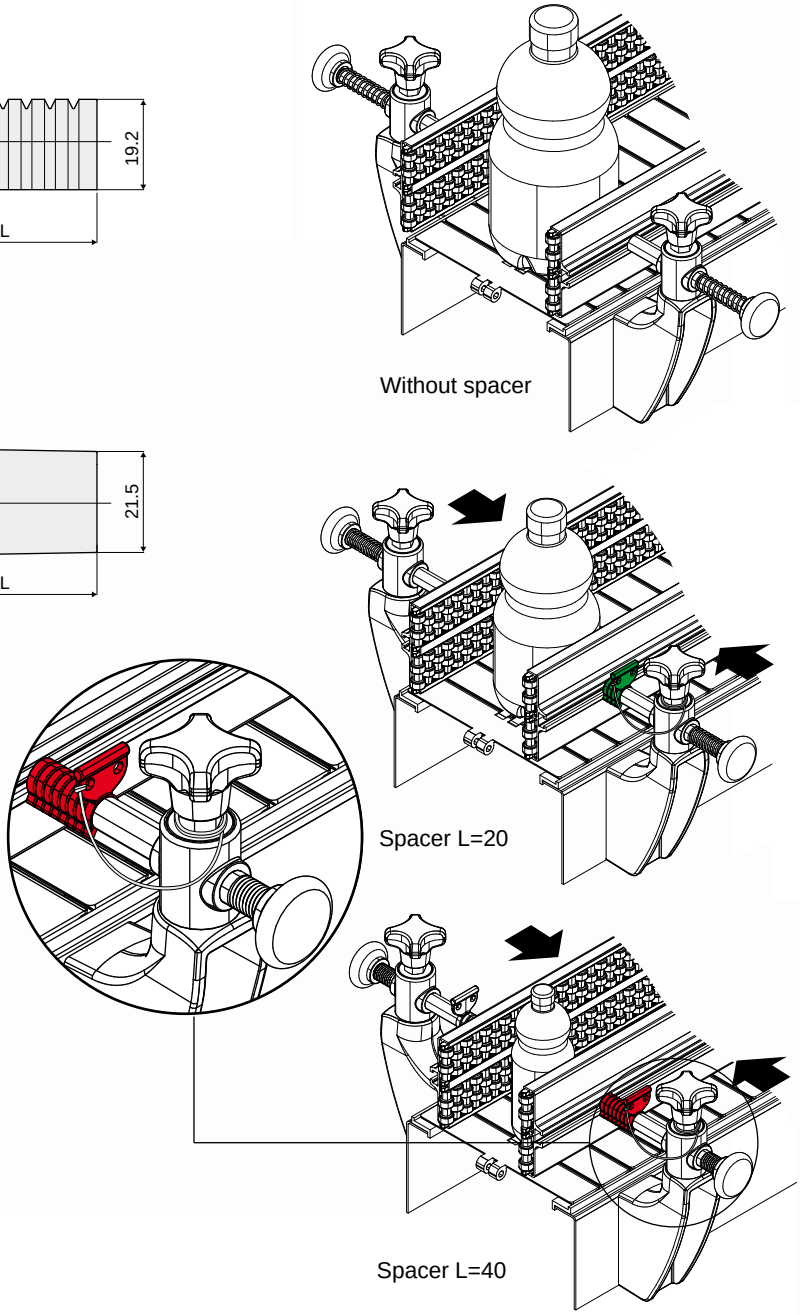

D (mm)	L (mm)	Colour	Type 1 Code
12	5	White RAL 9001	352 / 83419
	10	Red RAL 3000	352 / 83420
	15	Black RAL 9005	352 / 83421
	20	Green RAL 6029	352 / 83422
	25	Yellow RAL 1021	352 / 83423
	30	Orange RAL 2004	352 / 83424
	35	Blue RAL 5015	352 / 83425
	40	White RAL 9001	352 / 83411
		Red RAL 3000	352 / 83412
		Black RAL 9005	352 / 83413
		Green RAL 6029	352 / 83414
		Yellow RAL 1021	352 / 83415
		Orange RAL 2004	352 / 83416
		Blue RAL 5015	352 / 83417
		Grey RAL 7035	352 / 83418

D (mm)	L (mm)	Colour	Type 2 Code
16	40	White RAL 9001	352 / 84444
		Red RAL 3000	352 / 84445
		Green RAL 6029	352 / 84446

MATERIALS: Spacer in polypropylene.
FEATURES: To be used to adjust the distance between the side guides. Snap-on assembly. Available in different lengths and colours.
BOX QUANTITY: 24 pieces.
ON REQUEST:

- **Spacers:** Other colours.
- **Box quantity:** according to your request.

Accessories for the cross adjustment of the side guides

Guide rail pin
(for the quick adjustment of the side guides)

Part. **374**

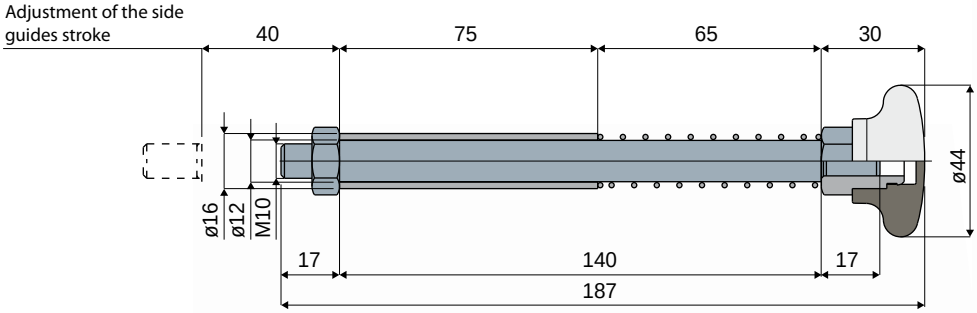

Example of application

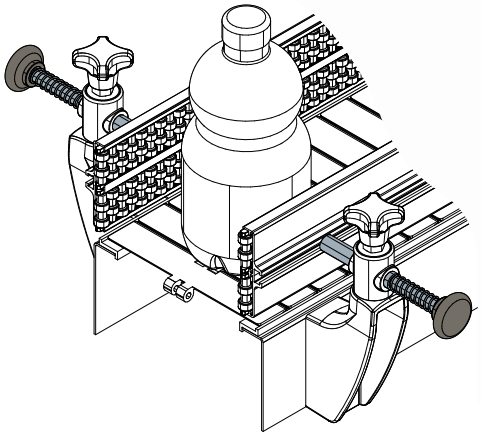

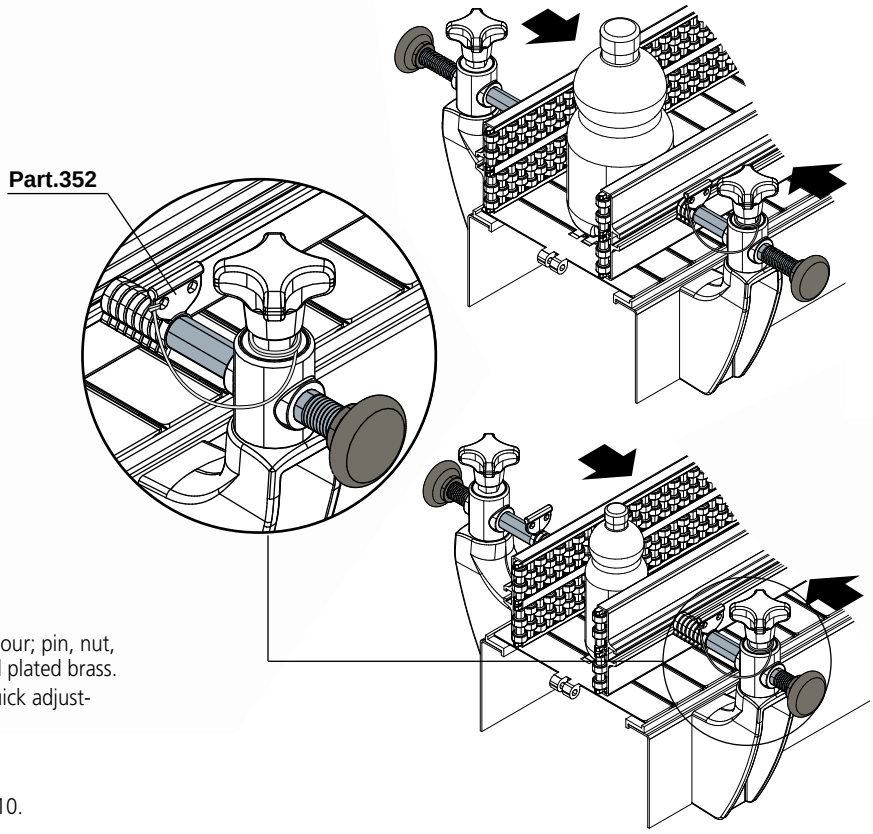

Code
374 / 83860

MATERIALS: Handle made of reinforced polyamide, black colour; pin, nut, spring and dinghy in stainless steel AISI 304; bushing in nickel plated brass.
FEATURES: To be used together with our Part.352, for the quick adjustment of the side guides.
BOX QUANTITY: 24 pieces.
ON REQUEST:
- **Pins:** In different lengths; with M8 thread instead of M10.
- **Box quantity:** According to your request.

Accessories for the cross adjustment of the side guides

Part. 299 Reducer for Racks

(for the cross adjustment of the side guides)

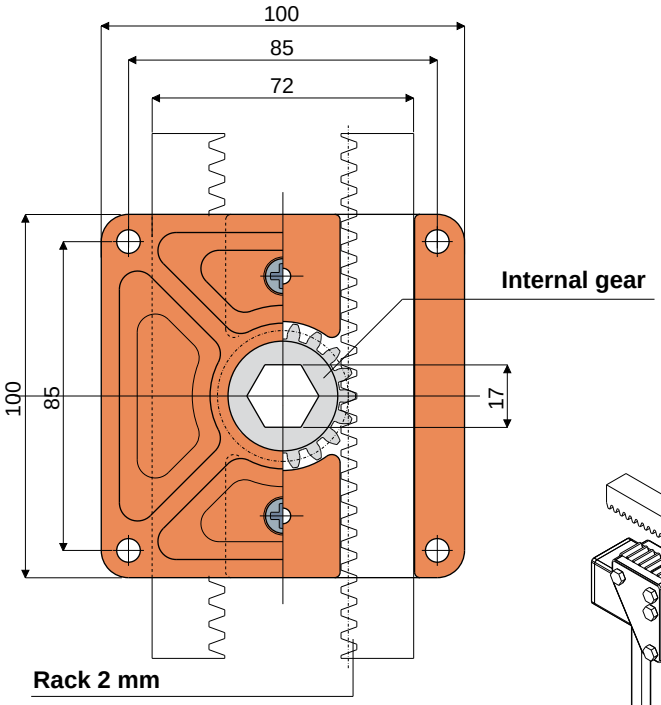

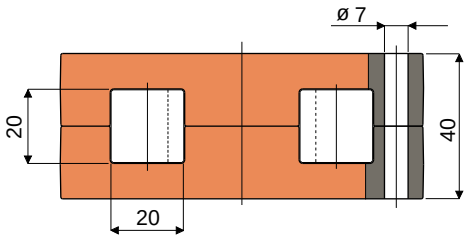

Rack sizes

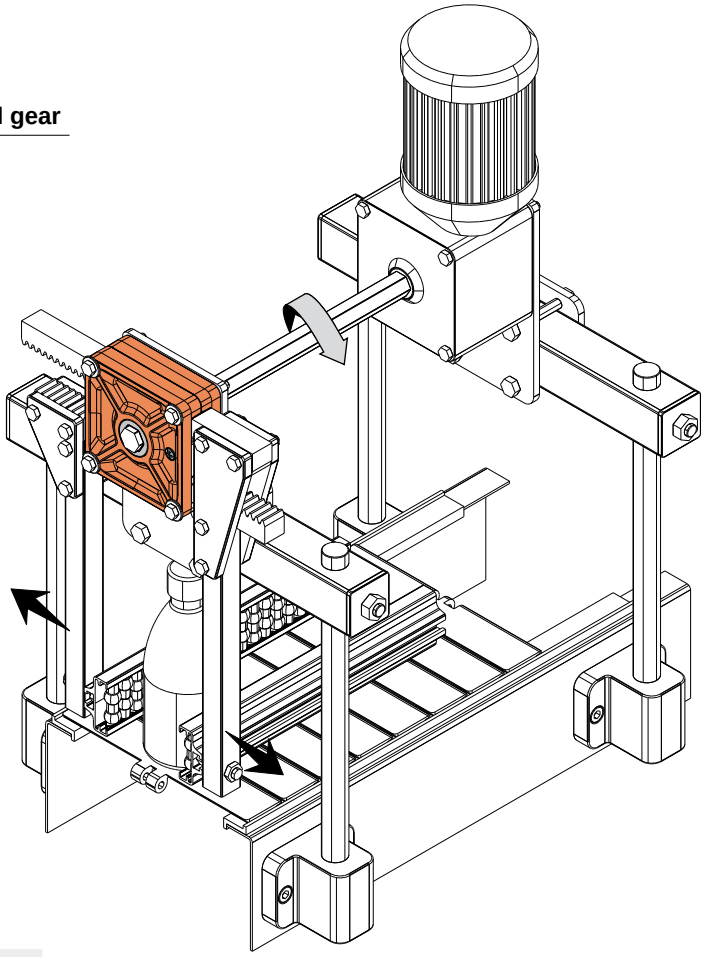

Example of application

Internal gear made of acetal	Internal gear made of brass	Without gear
Code	Code	Code
299 / 82681	299 / 83378	299 / 82680

MATERIALS: External body of reducer is made of reinforced polyamide orange colour; self-threading screw is made of stainless steel AISI 304.
Available: without internal gear; with internal gear made of acetal, white colour; with internal gear made of brass.
FEATURES: To be used for the cross adjustment of the side guides while changing the size of the conveyed product.
BOX QUANTITY: 24 pieces.
ON REQUEST:

- **Reducers:** In different colours.
- **Box quantity:** According to your request.

Process control

Scanning lever Part. 360

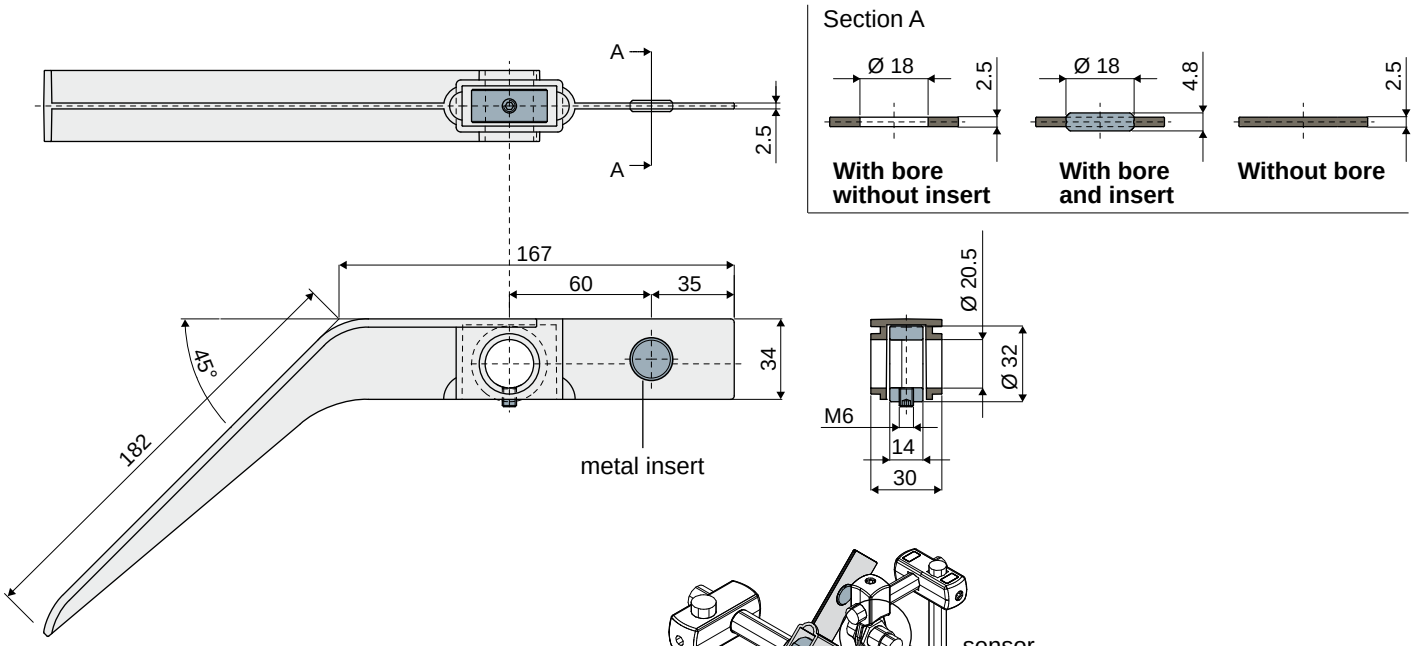

Stop ring in zinc plated steel		
Without bore	With bore without sensor insert	With bore and sensor insert
Code	Code	Code
360 / 83606	360 / 83607	360 / 83608

Stop ring in stainless steel AISI 304		
Without bore	With bore without sensor insert	With bore and sensor insert
Code	Code	Code
360 / 84091	360 / 85184	360 / 85185

MATERIALS: Scanning lever in reinforced polyamide black colour; grain and collar in zinc-plated steel or stainless steel AISI 304.

FEATURES: Supplied assembled.
To be used in the surveying of the packaged products, to help the arrival of the products.

BOX QUANTITY: 24 pieces.

ON REQUEST:

- **Scanning levers:** Versions without stop ring nor sensor insert; in different colours.
- **Box quantity:** According to your request.

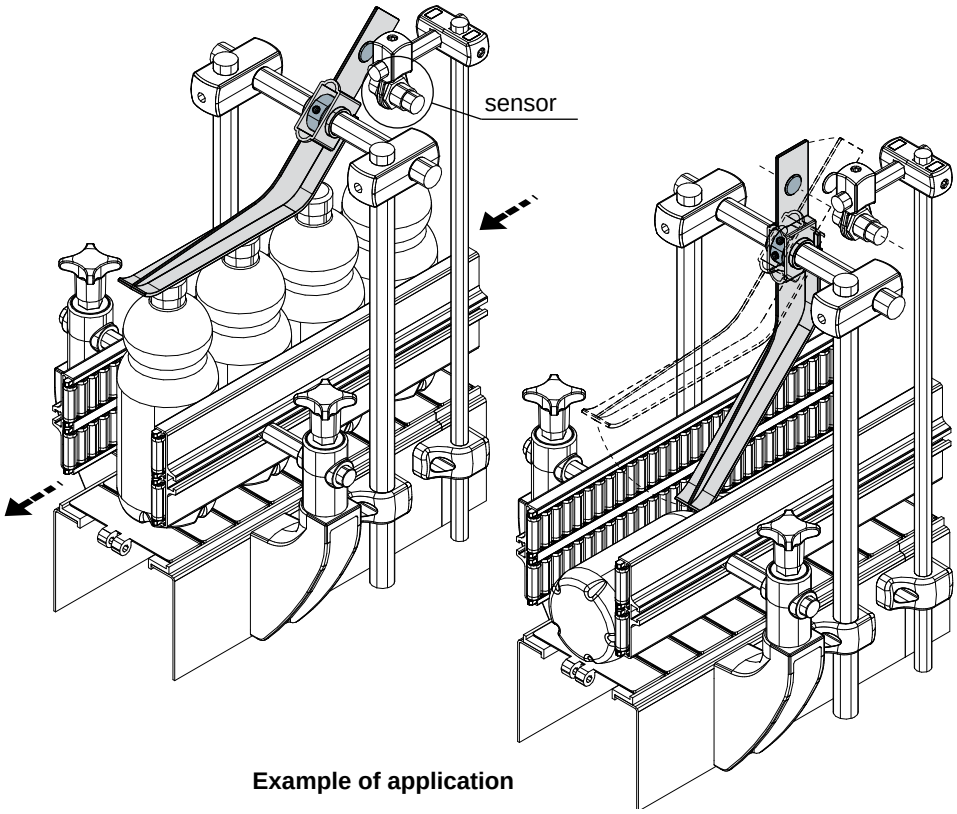

Example of application

Special products

Part	Pag.
700	131
701	130
702	130
703	130
704	131
705	132
706	132
Corner tracks	133
Straight tracks	133

The products shown in this part are available only on request

ergo Special

Chains and accessories

Part. **701** pag. 130

Part. **702** pag. 130

Part. **703** pag. 130

Part. **700** pag. 131

Part. **704** pag. 131

Part. **705** pag. 132

Part. **706** pag. 132

Corner and straight tracks

Corner tracks pag. 133

Straight tracks pag. 133

Chains and accessories

Part. 701 Sideflex chain

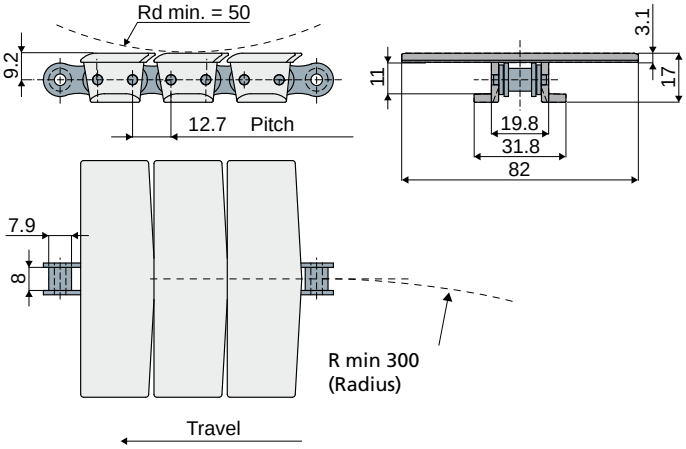

Code
701 / 84203

MATERIALS: Top plate made of grey acetal and roller chain made of steel.
FEATURES: To be used in the conveyor systems.
BOX QUANTITY: 3,048 meters.
ON REQUEST:
- **Top plates:** In polypropylene, different colours.
- **Box quantity:** According to your request.

ACCESSORIES:
- **Sprockets:** Unified for chains type ASA 40.

Part. 702 Top plate
(for Part. 701)

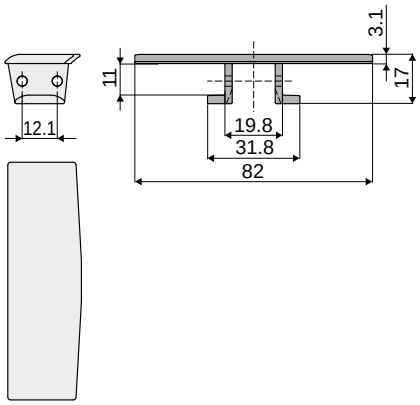

Code
702 / 84205

MATERIALS: Top plate made of grey acetal.
FEATURES: To be used as spare part for chain part. 701.
BOX QUANTITY: 24 pieces.
ON REQUEST:
- **Top plates:** In polypropylene, different colours.
- **Box quantity:** According to your request.

Part. 703 Sideflexing roller chain

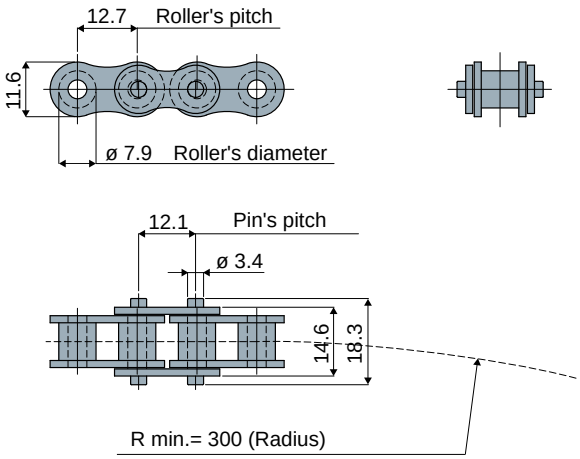

Code
703 / 84206

MATERIALS: Roller chain made of steel.
FEATURES: To be used as spare part for chain part. 701.
BOX QUANTITY: 3,048 meters.
ON REQUEST:
- **Chains:** In stainless steel.
- **Box quantity:** According to your request.

Chains and accessories

Example of application

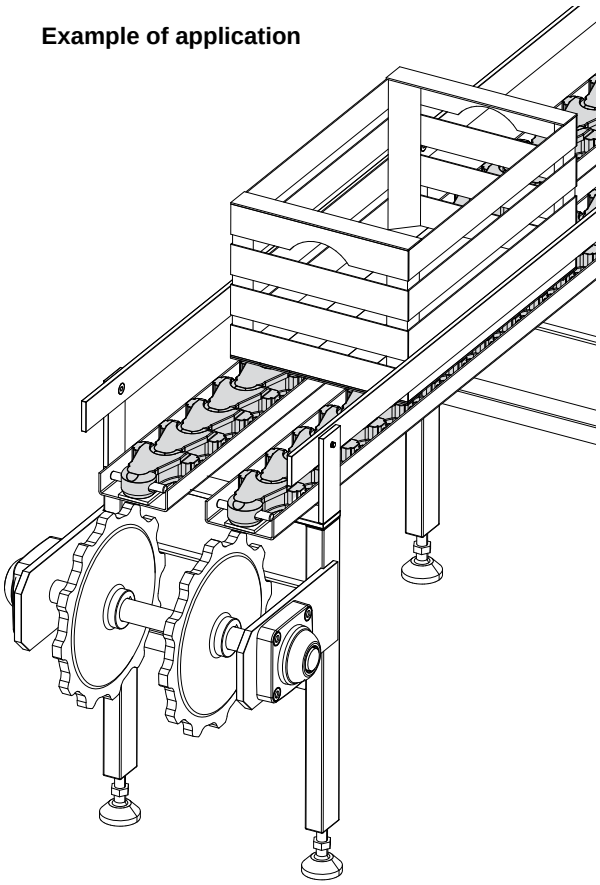

Cardanic chain
(sideflexing for important loads; pitch 80 mm)

Part. **700**

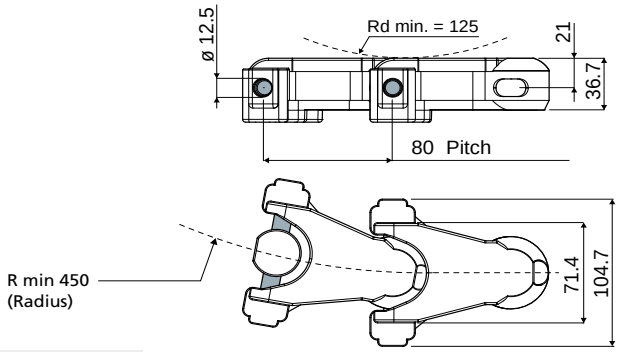

Code
700 / 84113

MATERIALS: Chain made of natural acetal; notch made of polyamide; pin made of stainless steel AISI 430.
FEATURES: To be used in the conveyor systems; for important loads (breaking load: 19600 N).
BOX QUANTITY: 3,040 meters.
ON REQUEST:
- Chains: In different colours.
- Box quantity: According to your request.

Sprocket T12
(for cardanic chain Part. 700)

Part. **704**

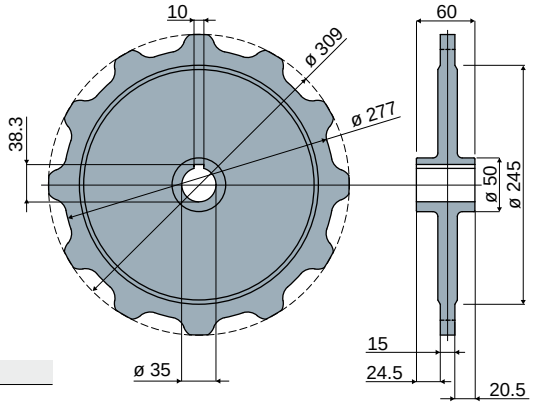

Code
704 / 84207

MATERIALS: Sprockets in zinc plated steel.
FEATURES: To be used with chain part. 700.
BOX QUANTITY: 2 pieces.
ON REQUEST:
- Sprockets: In different materials.
- Box quantity: According to your request.

Chains and accessories

Part. 705 Loose link for belt

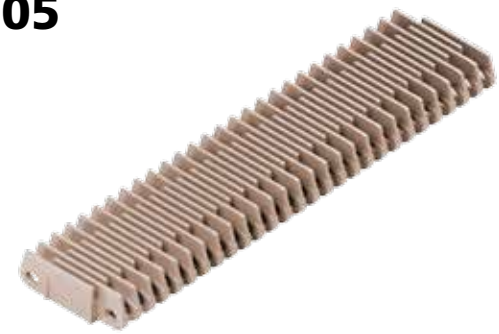

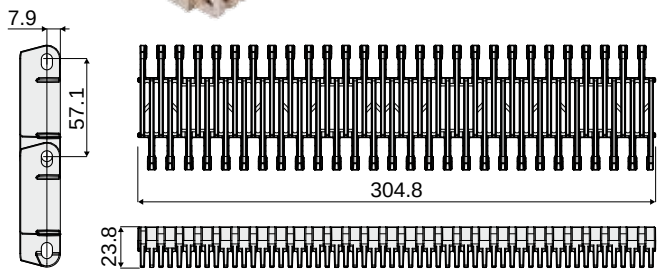

Code
705 / 84208

MATERIALS: Loose links in light brown polypropylene.
FEATURES: Perfect for use in the food industry, it guarantees a uniform conveyor surface. Max working load: 29200 N/m (21°C).
To be assembled with a pin diameter 6 mm (not supplied).
BOX QUANTITY: 24 pieces.
ON REQUEST:

- Loose links: In acetal.
- Belts: Supplied assembled in different sizes.
- Transfer combs: On request.
- Box quantity: According to your request.

Example of application

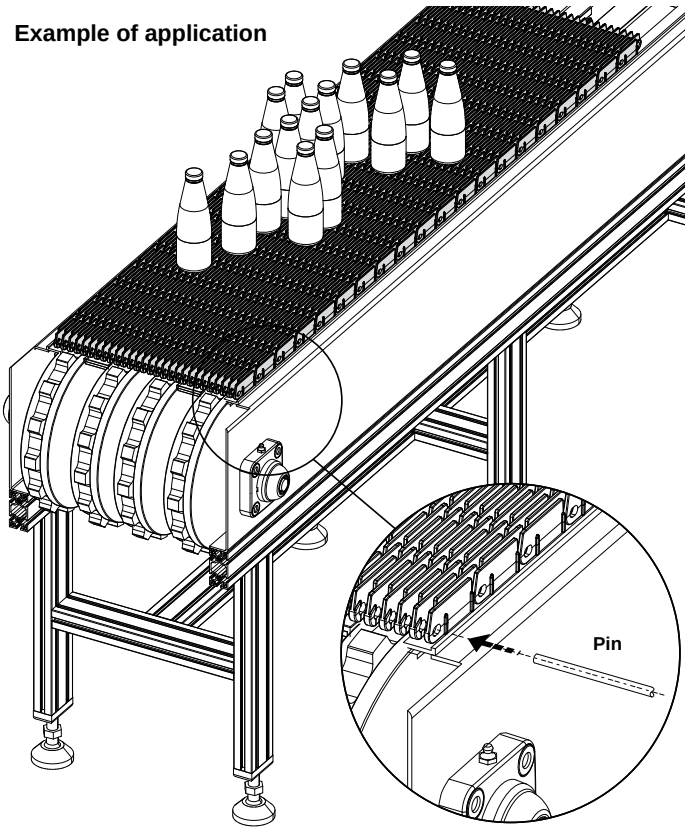

To be used with a pin diam. 6 mm

Part. 706 Sprocket / Idler wheel T14
(for modular belt)

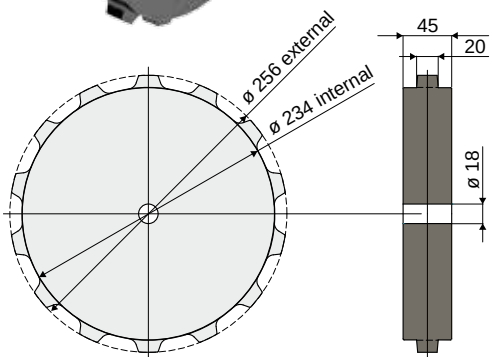

Code
706 / 84209

MATERIALS: Sprockets in black polyamide.
FEATURES: To be used with modular belts part. 705.
BOX QUANTITY: 2 pieces
ON REQUEST:

- Box quantity: According to your request.

Corner and straight tracks

Corner tracks

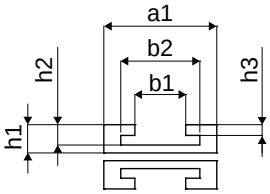

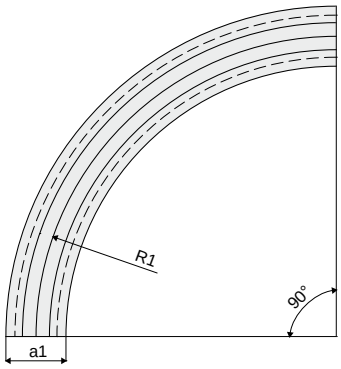

Chain type	Chain width	R1 (mm)	a1 (mm)	b1 (mm)	b2 (mm)	h1 (mm)	h2 (mm)	h3 (mm)	Track type	Material	Cod. Tecom
879TAB-K325 880TAB-K325 881TAB-K325 8811TAB-K325	82,5	500	100	45	70	25	18	9,5	Carry Return	PE 1000 PE 500	**83445** **83446**
879TAB-K450 880TAB-K450 880TAB-K454 881TAB-K450 8811TAB-K450	114,3	610	125	45	70	25	18	9,5	Carry Return	PE 1000 PE 500	**83449** **83450**
881TAB-K750 8811TAB-K750	190,5	610	200	45	70	25	18	9,5	Carry Return	PE 1000 PE 500	**83451** **83452**

MATERIALS: Upper parts in PE 1000, black colour and bottom parts in PE 500 black colour.
FEATURES: To be used to drive the chain in the corner sections.
BOX QUANTITY: 2 pieces.
ON REQUEST:

- **Corner tracks:** Magnetic, with different molecular weight; customised sizes.
- **Box quantity:** According to your request.

Straight tracks

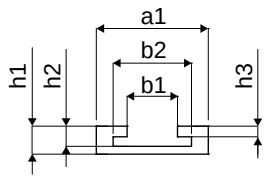

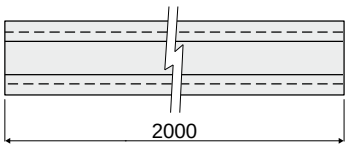

Chain type	Chain width	a1 (mm)	b1 (mm)	b2 (mm)	h1 (mm)	h2 (mm)	h3 (mm)	Material	Cod. Tecom
879TAB-K325 879BO-K325 880TAB-K325 881TAB-K325 8811TAB-K325	82,5	100	45	70	25	18	9,5	PE 500	**83652**
879TAB-K450 879BO-K450 880TAB-K450 881TAB-K450 8811TAB-K450	114,3	125	45	70	25	18	9,5	PE 500	**83653**

MATERIALS: Straight tracks in PE 500 black colour.
FEATURES: To be used to drive the chain in the straight sections.
BOX QUANTITY: 2 pieces.
ON REQUEST:

- **Straight tracks:** With different molecular weight, customised sizes.
- **Box quantity:** According to your request.

Self-aligning bearing supports

Serie	Pag.
UCF/C	136
MUCF/C	136
UCF/CX	138
MUCF/CX	138
UCF	140
MUCF	140
UCF/CS	142
MUCF/CS	142
UCF/CA	144
UCF/CXA	146
UCFL/C	148
UCFL/CX	150
UCFL	152

Serie	Pag.
UCFL/CS	154
MUCFL/C	156
MUCFL/CX	158
MUCFL	160
UCFL/CA	162
UCFL/CXA	164
UCFB/C	166
UCFB/CX	168
UCFB	170
UCP/C	172
UCP/CX	174
UCP	176

Square flanged bearing supports

Serie UCF/C pag. 136
Serie MUCF/C pag. 136

Serie UCF/CX pag. 138
Serie MUCF/CX pag. 138

Serie UCF pag. 140
Serie MUCF pag. 140

Serie UCF/CS pag. 142
Serie MUCF/CS pag. 142

Serie UCF/CA pag. 144

Serie UCF/CXA pag. 146

Oval flanged bearing supports

Serie UCFL/C pag. 148

Serie UCFL/CX pag. 150

Serie UCFL pag. 152

Serie UCFL/CS pag. 154

Serie MUCFL/C pag. 156

Serie MUCFL/CX pag. 158

Serie MUCFL pag. 160

Serie UCFL/CA pag. 162

Serie UCFL/CXA pag. 164

Side flanged bearing supports

Serie UCFB/C pag. 166

Serie UCFB/CX pag. 168

Serie UCFB pag. 170

Pillow Blocks

Serie UCP/C pag. 172

Serie UCP/CX pag. 174

Serie UCP pag. 176

Square flanged bearing supports

Serie **UCF/C**
Serie **MUCF/C**

Full protection of bearing

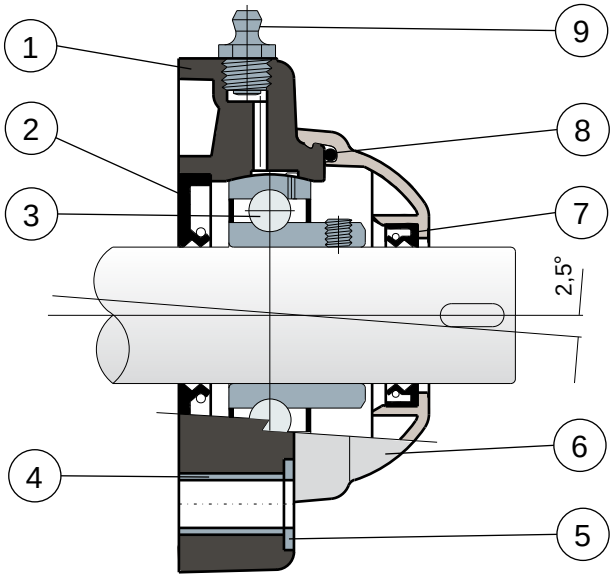

1) Support body made out of black or white colour polyamide reinforced with glass fibers.
2) Back gasket made out of NBR rubber for turning shaft seal.
3) Chrome steel or stainless steel bearing AISI 440.
4) Spacer for fixing reinforcement made out of stainless steel AISI 304.
5) UNI 6592 support washer made out of stainless steel AISI 304.
6) Protection cover made out of polypropylene (grey colour Ral 7042).
7) Front gasket made out of NBR rubber for turning shaft seal.
8) OR gasket made out of NBR rubber
9) Greaser for relubrication made out of nickel-plated brass.

Support dimensions respect ISO 3228 set of rules
Maximum shaft alignment error 2,5°
For further information please contact our technical office or sales department.

Square flanged bearing supports

Technical data

Serie **UCF/C**
Serie **MUCF/C**

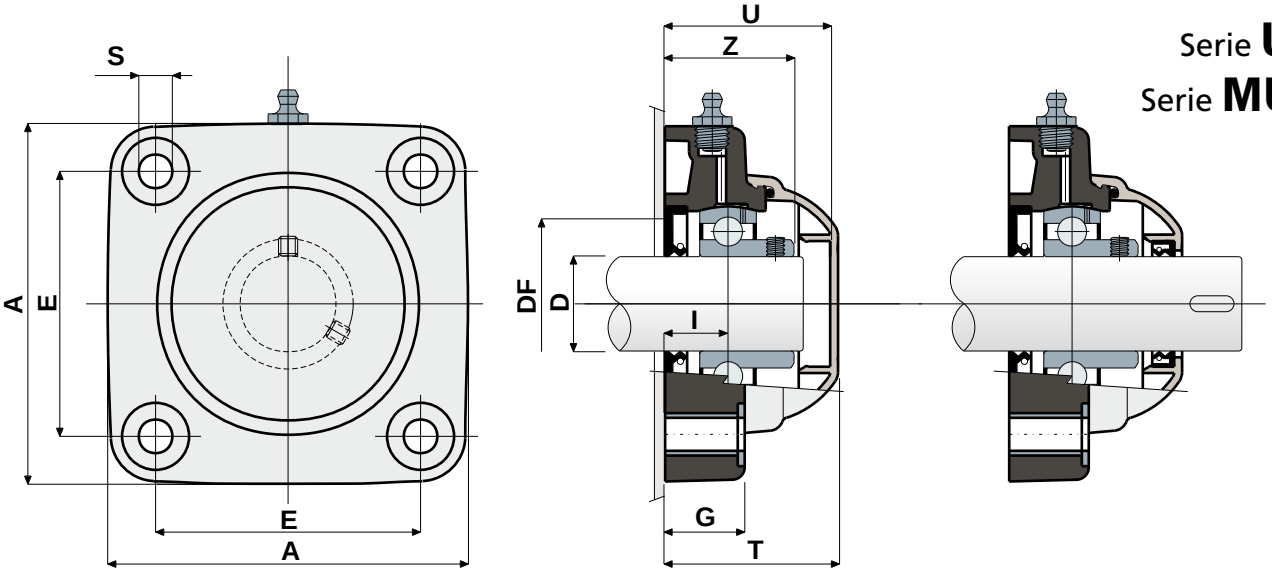

CLOSED TYPE **OPEN TYPE**

CHROME STEEL BEARING																		
D	SERIE	CODES				DIMENSIONS (mm)										Bearing load (N)		Bearing support load
		Black colour		White colour														
		Closed type	Open type	Closed type	Open type	E	A	S	G	I	Z	U	T	DF Max	DF Min	C	C0	(N)
20	UCF 204 C	80248	80249	84580	84581	63,5	90	10,5	19	15,5	33,5	44	46,5	45	40	12800	6600	16500
25	UCF 205 C	80057	80060	84582	84583	70	99	10,5	22	17	36	47	49	50	45	14000	7800	17000
30	UCF 206 C	80009	80005	84584	84585	83	113	10,5	26	20	41	54	56	60	50	19500	11300	17500
30	MUCF 206 C S	84038	84039	84586	84587	83	113	10,5	26	20	41	65	68	60	50	19500	11300	17500
35	UCF 207 C	80058	80061	84588	84589	92	122	10,5	26	20	45	57	59	70	55	25500	15300	18000
35	MUCF 207 C S	82549	82392	84590	84591	83	113	10,5	26	19,5	45	65	68	70	55	25500	15300	18000
40	UCF 208 C	80250	80251	84592	84593	102	133	10,5	26	19,5	48,5	65	68	78	65	32500	19800	18000
40	MUCF 208 C S	80697	80699	84594	84595	83	113	10,5	26	19,5	48,5	65	68	78	65	32500	19800	18000

STAINLESS STEEL BEARING AISI 440																		
D	SERIE	CODES				DIMENSIONS (mm)										Bearing load (N)		Bearing support load
		Black colour		White colour														
		Closed type	Open type	Closed type	Open type	E	A	S	G	I	Z	U	T	DF Max	DF Min	C	C0	(N)
20	UCF 204 C	80400	80448	84596	84597	63,5	90	10,5	19	15,5	33,5	44	46,5	45	40	8300	6550	16500
25	UCF 205 C	80445	80449	84598	84599	70	99	10,5	22	17	36	47	49	50	45	9150	7800	17000
30	UCF 206 C	80378	80377	84600	84601	83	113	10,5	26	20	41	54	56	60	50	12500	11200	17500
30	MUCF 206 C S	84040	84041	84602	84603	83	113	10,5	26	20	41	65	68	60	50	12500	11200	17500
35	UCF 207 C	80446	80450	84604	84605	92	122	10,5	26	20	45	57	59	70	55	16600	15300	18000
35	MUCF 207 C S	83467	83466	84606	84607	83	113	10,5	26	19,5	45	65	68	70	55	16600	15300	18000
40	UCF 208 C	80447	80451	84608	84609	102	133	10,5	26	19,5	48,5	65	68	78	65	20000	19000	18000
40	MUCF 208 C S	81057	81058	84610	84611	83	113	10,5	26	19,5	48,5	65	68	78	65	20000	19000	18000

VERSIONS WITH MEASURES IN INCHES

CHROME STEEL BEARING																			
D		SERIE	CODES				DIMENSIONS (mm)										Bearing load (N)		Bearing support load
			Black colour		White colour														
(inches)	(mm)		Closed type	Open type	Closed type	Open type	E	A	S	G	I	Z	U	T	DF Max	DF Min	C	C0	(N)
1"	25,4	UCF 205 C	84500	84490	84875	84876	70	99	10,5	22	17	36	47	49	50	45	9150	7800	17000
1"1/4	31,75	UCF 206 C	84501	84491	84877	84878	83	113	10,5	26	20	41	54	56	60	50	12500	11200	17500
1"1/4	31,75	MUCF 206 C S	84502	84492	85180	85181	83	113	10,5	26	20	41	65	68	60	50	12500	11200	17500

MATERIALS: Support made of PA + glass fiber black or white colour; chrome steel or stainless steel bearing; greaser made of nickel plated brass; reinforcement bushings and washers made of stainless steel AISI 304; gaskets made of NBR rubber; cover made of polypropylene, grey colour RAL 7042.
FEATURES: Full protection of bearing against external agents. Assembly with not shouldered shafts. Maximum shaft alignment error 2.5°.
BOX QUANTITY: 8 pieces.
ON REQUEST: Versions with body in polypropylene + glass fiber and antibacterial additive; protection cover in different colours and with customized brand; box quantity according to your request; Viton gaskets, "Long life" bearings.

S Self-aligning bearings with Solid body: completely closed surface to guarantee the max hygiene.

Square flanged bearing supports

Serie **UCF/CX**
Serie **MUCF/CX**

Without protection cover

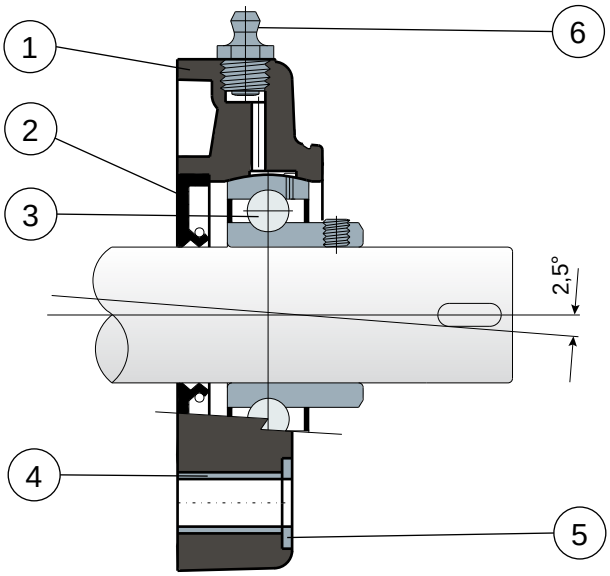

1) Support body made out of black or white colour polyamide reinforced with glass fibers.
2) Back gasket made out of NBR rubber for turning shaft seal.
3) Chrome steel or stainless steel bearing AISI 440.
4) Spacer for fixing reinforcement made out of stainless steel AISI 304.
5) UNI 6592 support washer made out of stainless steel AISI 304.
6) Greaser for relubrication made out of nickel-plated brass.

NOTE: The only difference from UCF/C series is lack of protection cover, which can be ordered separately as an accessory.

Support dimensions respect ISO 3228 set of rules.
Maximum shaft alignment error 2,5°
For further information please contact our technical office or sales department.

Square flanged bearing supports

Technical data

Serie **UCF/CX**
Serie **MUCF/CX**

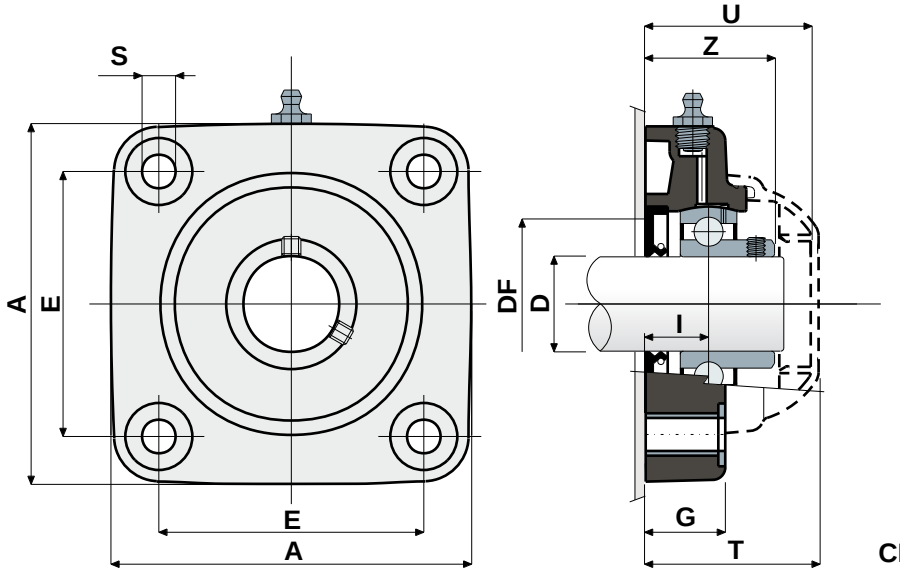

PROTECTION COVER

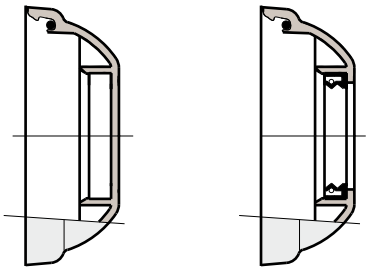

CLOSED TYPE **OPEN TYPE**

CHROME STEEL BEARING																		
D	SERIE	Support CODES		DIMENSIONS (mm)										Bearing load (N)		Bearing support load	COVER CODES	
		Black colour	White colour	E	A	S	G	I	Z	U	T	DF Max	DF Min	C	C0	(N)	Closed type	Open type
20	UCF 204 CX	80252	84612	63,5	90	10,5	19	15,5	33,5	44	46,5	45	40	12800	6600	16500	80254	80255
25	UCF 205 CX	80175	84613	70	99	10,5	22	17	36	47	49	50	45	14000	7800	17000	80075	80076
30	UCF 206 CX	80176	84614	83	113	10,5	26	20	41	54	56	60	50	19500	11300	17500	80011	80053
30	MUCF 206 CX S	80789	84615	83	113	10,5	26	20	41	65	68	60	50	19500	11300	17500	80256	80494
35	UCF 207 CX	80177	84616	92	122	10,5	26	20	45	57	59	70	55	25500	15300	18000	80077	80078
35	MUCF 207 CX S	83462	84617	83	113	10,5	26	19,5	45	65	68	70	55	25500	15300	18000	80256	80495
40	UCF 208 CX	80253	84618	102	133	10,5	26	19,5	48,5	65	68	78	65	32500	19800	18000	80256	80257
40	MUCF 208 CX S	80701	84619	83	113	10,5	26	19,5	48,5	65	68	78	65	32500	19800	18000	80256	80257

STAINLESS STEEL BEARING AISI 440																		
D	SERIE	Support CODES		DIMENSIONS (mm)										Bearing load (N)		Bearing support load	COVER CODES	
		Black colour	White colour	E	A	S	G	I	Z	U	T	DF Max	DF Min	C	C0	(N)	Closed type	Open type
20	UCF 204 CX	81047	84620	63,5	90	10,5	19	15,5	33,5	44	46,5	45	40	8300	6550	16500	80254	80255
25	UCF 205 CX	81049	84621	70	99	10,5	22	17	36	47	49	50	45	9150	7800	17000	80075	80076
30	UCF 206 CX	81050	84622	83	113	10,5	26	20	41	54	56	60	50	12500	11200	17500	80011	80053
30	MUCF 206 CX S	84042	84623	83	113	10,5	26	20	41	65	68	60	50	19500	11300	17500	80256	80494
35	UCF 207 CX	81051	84624	92	122	10,5	26	20	45	57	59	70	55	16600	15300	18000	80077	80078
35	MUCF 207 CX S	82404	84625	83	113	10,5	26	19,5	45	65	68	70	55	16600	15300	18000	80256	80495
40	UCF 208 CX	80561	84626	102	133	10,5	26	19,5	48,5	65	68	78	65	20000	19000	18000	80256	80257
40	MUCF 208 CX S	81043	84627	83	113	10,5	26	19,5	48,5	65	68	78	65	20000	19000	18000	80256	80257

VERSIONS WITH MEASURES IN INCHES

CHROME STEEL BEARING																			
D		SERIE	Support CODES		DIMENSIONS (mm)										Bearing load (N)		Bearing support load	COVER CODES	
(inches)	(mm)		Black colour	White colour	E	A	S	G	I	Z	U	T	DF Max	DF Min	C	C0	(N)	Closed type	Open type
1"	25,4	UCF 205 CX	84493	84883	70	99	10,5	22	17	36	47	49	50	45	9150	7800	17000	80075	85202
1"1/4	31,75	UCF 206 CX	84494	84884	83	113	10,5	26	20	41	54	56	60	50	12500	11200	17500	80011	85203
1"1/4	31,75	MUCF 206 CX S	84495	85182	83	113	10,5	26	20	41	65	68	60	50	19500	11300	17500	80256	85204

MATERIALS: Support made out of PA + glass fiber black or white colour; chrome steel or stainless steel bearing; greaser made out of nickel plated brass; reinforcement bushings and washers made out of stainless steel AISI 304; gaskets made out of NBR rubber; cover made out of polypropylene, grey colour RAL 7042.
FEATURES: The difference from UCF/C series is lack of protection cover which can be ordered separately as an accessory. Assembly with not shouldered shafts. Maximum shaft alignment error 2.5°.
BOX QUANTITY: 8 pieces.
ON REQUEST: Versions with body in polypropylene + glass fiber and antibacterial additive; protection cover in different colours and with customized brand; box quantity according to your request; Viton gaskets, "Long life" bearings.

S Self-aligning bearings with Solid body: completely closed surface to guarantee the max hygiene.

Square flanged bearing supports

Serie **UCF**
Serie **MUCF**

Without cover and back gasket

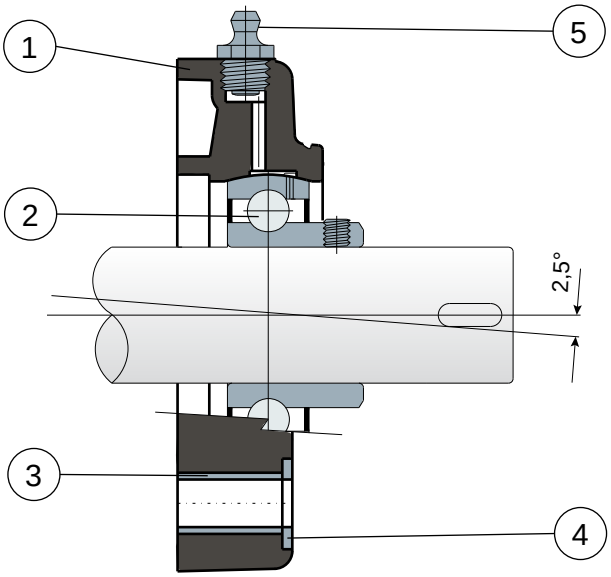

1) Support body made out of black or white colour polyamide reinforced with glass fibers.
2) Chrome steel or stainless steel bearing AISI 440.
3) Spacer for fixing reinforcement made out of stainless steel AISI 304.
4) UNI 6592 support washer made out of stainless steel AISI 304.
5) Greaser for relubrication made out of nickel-plated brass.

NOTE: The only difference from UCF/C series is lack of back gasket and protection cover, which can be ordered separately as accessories.

Support dimensions respect ISO 3228 set of rules.
Maximum shaft alignment error 2,5°
For further information please contact our technical office or sales department.

Square flanged bearing supports

Technical data

Serie **UCF**
Serie **MUCF**

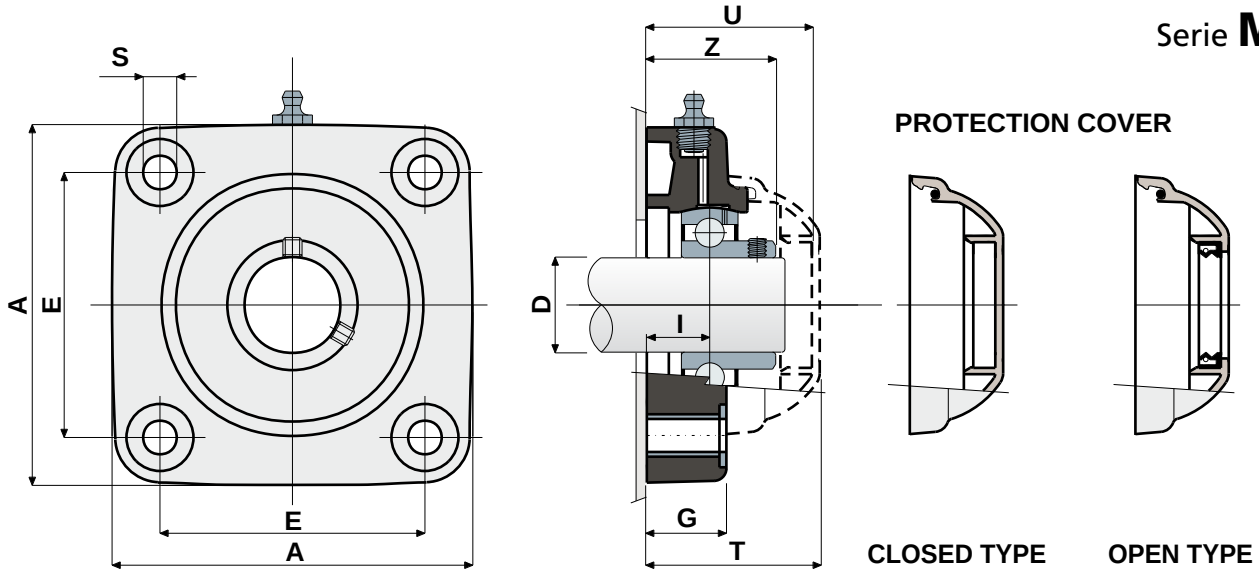

CHROME STEEL BEARING																
		Support CODES		DIMENSIONS (mm)								Bearing load (N)		Bearing support load	COVER CODES	
D	SERIE	Black colour	White colour	E	A	S	G	I	Z	U	T	C	C0	(N)	Closed type	Open type
20	UCF 204	80258	84628	63,5	90	10,5	19	15,5	33,5	44	46,5	12800	6600	16500	80254	80255
25	UCF 205	80054	84629	70	99	10,5	22	17	36	47	49	14000	7800	17000	80075	80076
30	UCF 206	80010	84630	83	113	10,5	26	20	41	54	56	19500	11300	17500	80011	80053
30	MUCF 206 S	84043	84631	83	113	10,5	26	20	41	65	68	19500	11300	17500	80256	80494
35	UCF 207	80055	84632	92	122	10,5	26	20	45	57	59	25500	15300	18000	80077	80078
35	MUCF 207 S	82652	84633	83	113	10,5	26	19,5	45	65	68	25500	15300	18000	80256	80495
40	UCF 208	80259	84634	102	133	10,5	26	19,5	48,5	65	68	32500	19800	18000	80256	80257
40	MUCF 208 S	80712	84635	83	113	10,5	26	19,5	48,5	65	68	32500	19800	18000	80256	80257

STAINLESS STEEL BEARING AISI 440																
		Support CODES		DIMENSIONS (mm)								Bearing load (N)		Bearing support load	COVER CODES	
D	SERIE	Black colour	White colour	E	A	S	G	I	Z	U	T	C	C0	(N)	Closed type	Open type
20	UCF 204	80514	84636	63,5	90	10,5	19	15,5	33,5	44	46,5	8300	6550	16500	80254	80255
25	UCF 205	80515	84637	70	99	10,5	22	17	36	47	49	9150	7800	17000	80075	80076
30	UCF 206	80976	84638	83	113	10,5	26	20	41	54	56	12500	11200	17500	80011	80053
30	MUCF 206 S	84044	84639	83	113	10,5	26	20	41	65	68	12500	11200	17500	80256	80494
35	UCF 207	81052	84640	92	122	10,5	26	20	45	57	59	16600	15300	18000	80077	80078
35	MUCF 207 S	83468	84641	83	113	10,5	26	19,5	45	65	68	16600	15300	18000	80256	80495
40	UCF 208	80695	84642	102	133	10,5	26	19,5	48,5	65	68	20000	19000	18000	80256	80257
40	MUCF 208 S	81045	84643	83	113	10,5	26	19,5	48,5	65	68	20000	19000	18000	80256	80257

VERSIONS WITH MEASURES IN INCHES

CHROME STEEL BEARING																		
D			Support CODES		DIMENSIONS (mm)									Bearing load (N)		Bearing support load	COVER CODES	
(inches)	(mm)	SERIE	Black colour	White colour	E	A	S	G	I	Z	U	T	C	C0	(N)	Closed type	Open type
1"	25,4	UCF 205	84496	84887	70	99	10,5	22	17	36	47	49	14000	7800	17000	80075	85202
1"1/4	31,75	UCF 206	84497	84888	83	113	10,5	26	20	41	54	56	19500	11300	17500	80011	85203
1"1/4	31,75	MUCF 206 S	84498	85183	83	113	10,5	26	20	41	65	68	19500	11300	17500	80256	85204

MATERIALS: Support made out of PA + glass fiber black or white colour; chrome steel or stainless steel bearing; greaser made out of nickel plated brass; reinforcement bushings and washers made out of stainless steel AISI 304; gaskets made out of NBR rubber; cover made out of polypropylene, grey colour RAL 7042.
FEATURES: The difference from UCF/C series is lack of back gasket and protection cover, which can be ordered separately as accessories. Assembly with shouldered and not shouldered shafts. Maximum shaft alignment error 2.5°.
BOX QUANTITY: 8 pieces.
ON REQUEST: Versions with body in polypropylene + glass fiber and antibacterial additive; protection cover in different colours and with customized brand; box quantity according to your request; Viton gaskets, "Long life" bearings.

S Self-aligning bearings with Solid body: completely closed surface to guarantee the max hygiene.

Square flanged bearing supports

Serie **UCF/CS**
Serie **MUCF/CS**

NEW

New product line with support body in PA white colour.

Back gasket for shouldered shaft

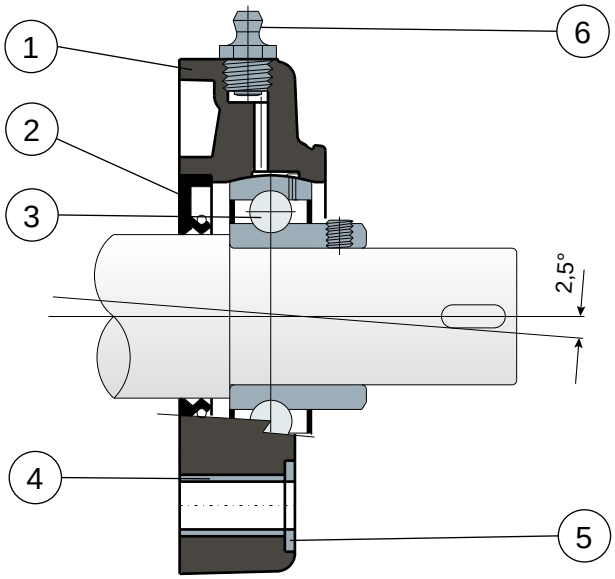

1) Support body made out of black or white colour polyamide reinforced with glass fibers.
2) Back gasket made out of NBR rubber for turning shaft seal.
3) Chrome steel or stainless steel bearing AISI 440.
4) Spacer for fixing reinforcement made out of stainless steel AISI 304.
5) UNI 6592 support washer made out of stainless steel AISI 304.
6) Greaser for relubrication made out of nickel-plated brass.

Support dimensions respect ISO 3228 set of rules.
Maximum shaft alignment error 2,5°
For further information please contact our technical office or sales department.

Square flanged bearing supports

Technical data

Serie **UCF/CS**
Serie **MUCF/CS**

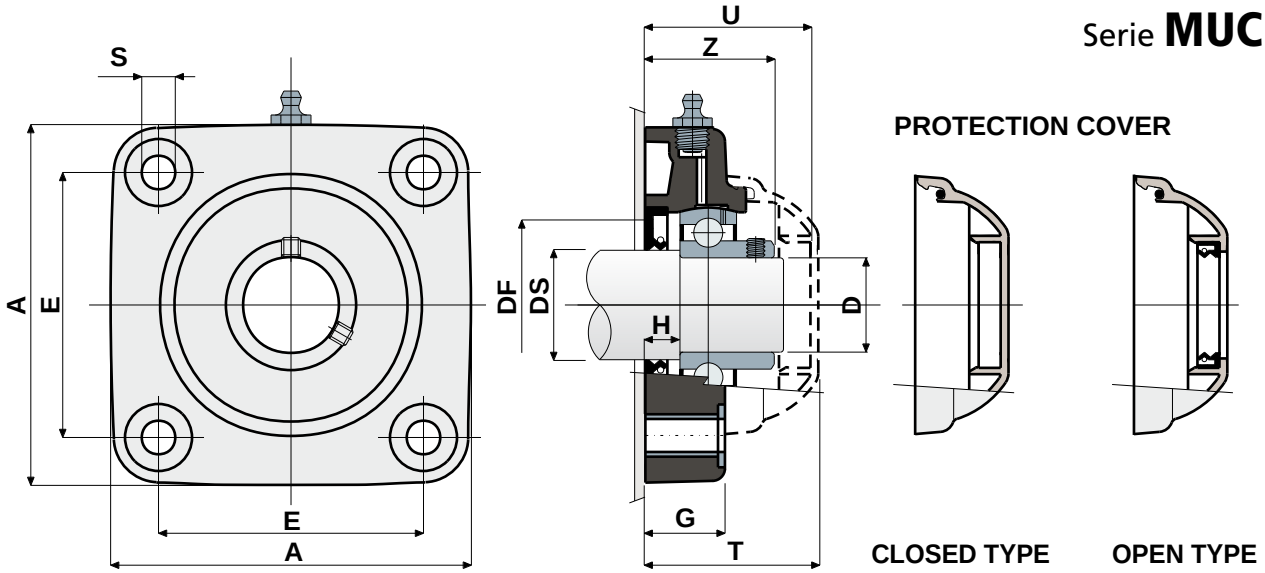

CHROME STEEL BEARING																				
DS	D	SERIE	Support CODES		DIMENSIONS (mm)										Bearing load (N)		Bearing support load	COVER CODES	
			Black colour	White colour	E	A	S	G	H	Z	U	T	DF Max	DF Min	C	C0	(N)	Closed type	Open type
25	20	UCF 204 CS	80260	85246	63,5	90	10,5	19	8,5	33,5	44	46,5	45	40	12800	6600	16500	80254	80255
30	25	UCF 205 CS	80178	85247	70	99	10,5	22	10	36	47	49	50	45	14000	7800	17000	80075	80076
35	30	UCF 206 CS	80179	85248	83	113	10,5	26	11,5	41	54	56	60	50	19500	11300	17500	80011	80053
35	30	MUCF 206 CS S	84045	85249	83	113	10,5	26	11,5	41	65	68	60	50	19500	11300	17500	80256	80494
40	35	UCF 207 CS	80180	85250	92	122	10,5	26	10,5	45	57	59	70	55	25500	15300	18000	80077	80078
40	35	MUCF 207 CS S	84046	85251	83	122	10,5	26	10,5	45	65	68	70	55	25500	15300	18000	80256	80257
45	40	UCF 208 CS	80261	85252	102	133	10,5	26	9	48,5	65	68	78	65	32500	19800	18000	80256	80257
45	40	MUCF 208 CS S	80713	85253	83	113	10,5	26	9	48,5	65	68	78	65	32500	19800	18000	80256	80257

STAINLESS STEEL BEARING AISI 440																				
DS	D	SERIE	Support CODES		DIMENSIONS (mm)										Bearing load (N)		Bearing support load	COVER CODES	
			Black colour	White colour	E	A	S	G	H	Z	U	T	DF Max	DF Min	C	C0	(N)	Closed type	Open type
25	20	UCF 204 CS	83520	85254	63,5	90	10,5	19	8,5	33,5	44	46,5	45	40	12800	6600	16500	80254	80255
30	25	UCF 205 CS	84146	85255	70	99	10,5	22	10	36	47	49	50	45	14000	7800	17000	80075	80076
35	30	UCF 206 CS	83829	85256	83	113	10,5	26	11,5	41	54	56	60	50	19500	11300	17500	80011	80053
35	30	MUCF 206 CS S	85259	85261	83	113	10,5	26	11,5	41	65	68	60	50	19500	11300	17500	80256	80494
40	35	UCF 207 CS	84147	85257	92	122	10,5	26	10,5	45	57	59	70	55	25500	15300	18000	80077	80078
40	35	MUCF 207 CS S	85260	85262	83	122	10,5	26	10,5	45	65	68	70	55	25500	15300	18000	80256	80257
45	40	UCF 208 CS	80322	85258	102	133	10,5	26	9	48,5	65	68	78	65	32500	19800	18000	80256	80257
45	40	MUCF 208 CS S	83828	85263	83	113	10,5	26	9	48,5	65	68	78	65	32500	19800	18000	80256	80257

MATERIALS: Support made out of PA + glass fiber black or white colour; chrome steel bearing; greaser made out of nickel plated brass; reinforcement bushings and washers made out of stainless steel AISI 304; gaskets made out of NBR rubber; cover made out of polypropylene, grey colour RAL 7042.
FEATURES: Back gasket for shouldered shafts; protection cover can be ordered separately as accessory. Use of shouldered shafts allows a higher capability of axial load. Maximum shaft alignment error 2.5°.
BOX QUANTITY: 8 pieces.
ON REQUEST: Versions with body in polypropylene + glass fiber and antibacterial additive; protection cover in different colours and with customized brand; box quantity according to your request; Viton gaskets, "Long life" bearings.

S Self-aligning bearings with Solid body: completely closed surface to guarantee the max hygiene.

Square flanged bearing supports

Serie **UCF/CA**

External cover made out of stainless steel AISI 304

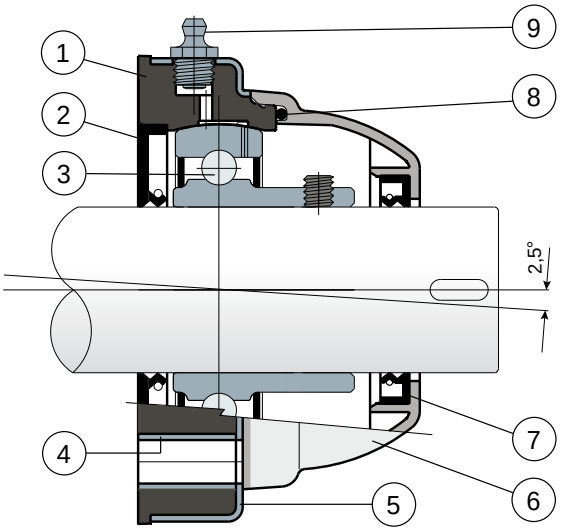

1) Internal body of support made out of black polypropylene reinforced with glass fibers.
2) Back gasket made out of NBR rubber for turning shaft seal.
3) Chrome steel or stainless steel bearing AISI 440.
4) Spacer for fixing reinforcement made out of stainless steel AISI 304.
5) External cover of support made out of AISI 304 stainless steel.
6) Protection cover made out of polypropylene (grey colour Ral 7042).
7) Front gasket made out of NBR rubber for turning shaft seal.
8) OR gasket made out of NBR rubber
9) Greaser for relubrication made out of nickel-plated brass.

Maximum shaft alignment error 2,5°
For further information please contact our technical office or sales department.

Square flanged bearing supports

Technical data

Serie **UCF/CA**

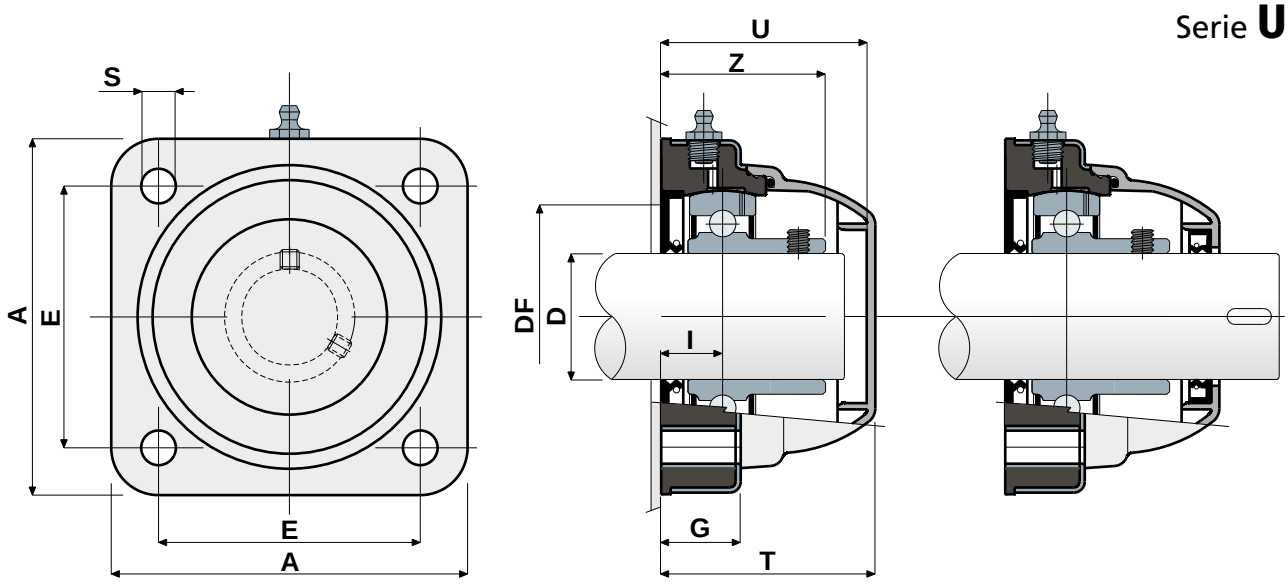

CLOSED TYPE

OPEN TYPE

CHROME STEEL BEARING																
D (mm)	SERIE	CODES Closed type	CODES Open type	DIMENSIONS (mm) E	A	S	G	I	Z	U	T	DF Max	DF Min	Bearing load (N) C	C0	Bearing support load (N)
30	UCF 206 CA	80409	80410	83	113	11	27	20	41	65	68	60	50	19500	11300	17500
35	UCF 207 CA	80485	80486	83	113	11	27	19,5	45	65	68	70	55	25500	15300	18000
40	UCF 208 CA	80411	80412	83	113	11	27	19,5	48,5	65	68	78	65	32500	19800	18000

STAINLESS STEEL BEARING AISI 440																
D (mm)	SERIE	CODES Closed type	CODES Open type	DIMENSIONS (mm) E	A	S	G	I	Z	U	T	DF Max	DF Min	Bearing load (N) C	C0	Bearing support load (N)
30	UCF 206 CA	80453	80464	83	113	11	27	20	41	65	68	60	50	12500	11200	17500
35	UCF 207 CA	81059	81060	83	113	11	27	19,5	45	65	68	70	55	16600	15300	18000
40	UCF 208 CA	80454	81061	83	113	11	27	19,5	48,5	65	68	78	65	20000	19000	18000

VERSIONS WITH MEASURES IN INCHES

CHROME STEEL BEARING																		
D (inches)	D (mm)	SERIE	CODES Closed type	CODES Open type	DIMENSIONS (mm) E	A	S	G	I	Z	U	T	DF Max	DF Min	Bearing load (N) C	C0	Bearing support load (N)
1"1/4	31,75	UCF 206 CA	84499	84503	83	113	11	27	20	41	65	68	60	50	12500	11200	17500

MATERIALS: Support made out of black colour PP + glass fiber; external cover of support made out of AISI 304 stainless steel; chrome steel or stainless steel bearing; greaser made out of nickel plated brass; reinforcement bushings made out of AISI 304 stainless steel; gaskets made out of NBR rubber; protection cover made out of polypropylene grey colour RAL 7042.
FEATURES: Full protection of bearing against external agents. Support body made out of polypropylene covered by an AISI 304 stainless steel later, to obtain the maximum chemical resistance to antibacterial detergents used in food processing field. More over this part is moulded without internal cavities in order to obtain the best sanification. Assembly with not shouldered shaft. Maximum shaft alignment error 2.5°.
BOX QUANTITY: 8 pieces.
ON REQUEST: Protection covers in different colours and with customized brand; box quantity according to your request; internal body in reinforced polypropylene white colour; Viton gaskets, "Long life" bearings.

S Self-aligning bearings with Solid body: completely closed surface to guarantee the max hygiene.

Square flanged bearing supports

Serie **UCF/CXA**

External cover made out of stainless steel AISI 304; without protection cover

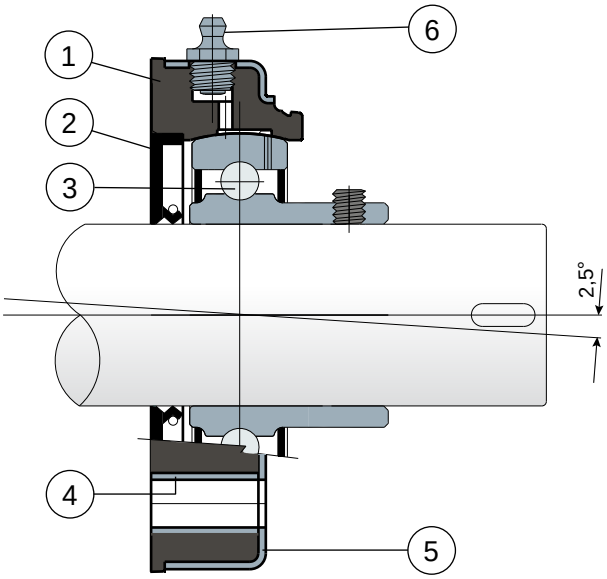

1) Internal body of support made out of black polypropylene reinforced with glass fibers.
2) Back gasket made out of NBR rubber for turning shaft seal.
3) Chrome steel or stainless steel bearing AISI 440.
4) Spacer for fixing reinforcement made out of stainless steel AISI 304.
5) External cover of support made out of AISI 304 stainless steel.
6) Greaser for relubrication made out of nickel-plated brass.

NOTE: The only difference from UCF/CA series is lack of protection cover, which can be ordered separately as an accessory.

Maximum shaft alignment error 2,5°
For further information please contact our technical office or sales department.

Square flanged bearing supports

Technical data

Serie **UCF/CXA**

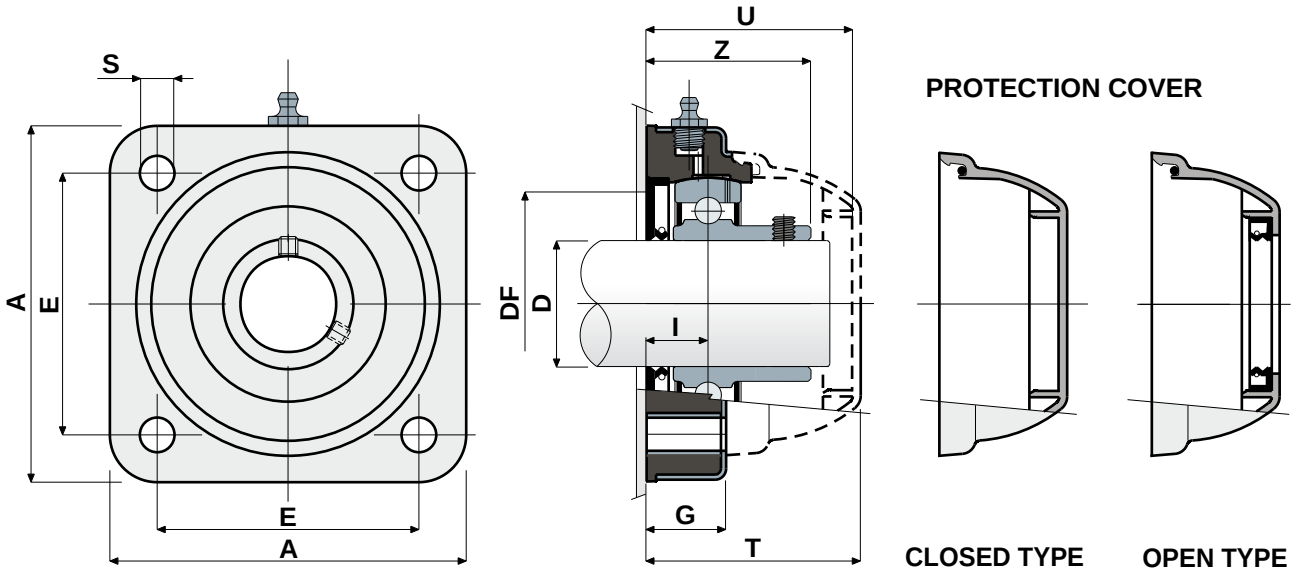

CHROME STEEL BEARING																	
D (mm)	SERIE	Support CODES	DIMENSIONS (mm)										Bearing load (N)		Bearing support load	COVER CODES	
			E	A	S	G	I	Z	U	T	DF Max	DF Min	C	C0	(N)	Closed type	Open type
30	UCF 206 CXA S	**80413**	83	113	11	27	20	41	65	68	60	50	19500	11300	17500		**80494**
35	UCF 207 CXA S	**80479**	83	113	11	27	19,5	45	65	68	70	55	25500	15300	18000	**80256**	**80495**
40	UCF 208 CXA S	**80414**	83	113	11	27	19,5	48,5	65	68	78	65	32500	19800	18000		**80257**

STAINLESS STEEL BEARING AISI 440																	
D (mm)	SERIE	Support CODES	DIMENSIONS (mm)										Bearing load (N)		Bearing support load	COVER CODES	
			E	A	S	G	I	Z	U	T	DF Max	DF Min	C	C0	(N)	Closed type	Open type
30	UCF 206 CXA S	**80499**	83	113	11	27	20	41	65	68	60	50	12500	11200	17500		**80494**
35	UCF 207 CXA S	**80500**	83	113	11	27	19,5	45	65	68	70	55	16600	15300	18000	**80256**	**80495**
40	UCF 208 CXA S	**80501**	83	113	11	27	19,5	48,5	65	68	78	65	20000	19000	18000		**80257**

VERSIONS WITH MEASURES IN INCHES

CHROME STEEL BEARING																			
D		SERIE	Support CODES	DIMENSIONS (mm)										Bearing load (N)		Bearing support load	COVER CODES	
(inches)	(mm)			E	A	S	G	I	Z	U	T	DF Max	DF Min	C	C0	(N)	Closed type	Open type
1"1/4	31,75	UCF 206 CXA S	**84505**	83	113	11	27	20	41	65	68	60	50	12500	11200	17500	**80256**	**85204**

MATERIALS: Support made out of PP + glass fiber; external cover of support made out of AISI 304 stainless steel; chrome steel or stainless steel bearing; greaser made out of nickel plated brass; reinforcement bushings made out of AISI 304 stainless steel; gaskets made out of NBR rubber; protection cover made out of polypropylene grey colour RAL 7042.
FEATURES: The only difference from UCF/CA series is lack of protection cover, which can be ordered separately as an accessory. Support body made out of polypropylene covered by an AISI 304 stainless steel later, to obtain the maximum chemical resistance to antibacterial detergents used in food processing field. More over this part is moulded without internal cavities in order to obtain the best sanification. Assembly with not shouldered shaft. Maximum shaft alignment error 2.5°.
BOX QUANTITY: 8 pieces.
ON REQUEST: Protection covers in different colours and with customized brand; internal body in reinforced polypropylene white colour; box quantity according to your request; Viton gaskets, "Long life" bearings.

S Self-aligning bearings with Solid body: completely closed surface to guarantee the max hygiene.

Oval flanged bearing supports

Serie **UCFL/C**

Full protection of bearing

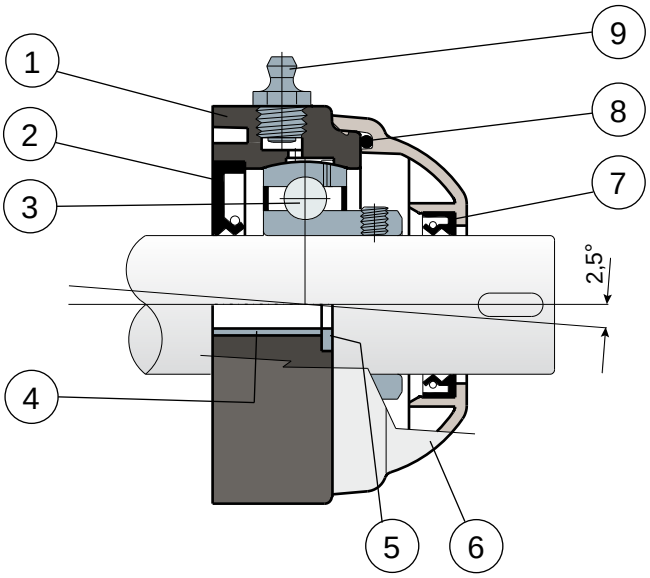

1) Support body made out of black or white colour polyamide reinforced with glass fibers.
2) Back gasket made out of NBR rubber for turning shaft seal.
3) Chrome steel or stainless steel bearing AISI 440.
4) Spacer for fixing reinforcement made out of stainless steel AISI 304.
5) UNI 6592 support washer made out of stainless steel AISI 304.
6) Protection cover made out of polypropylene (grey colour Ral 7042).
7) Front gasket made out of NBR rubber for turning shaft seal.
8) OR gasket made out of NBR rubber
9) Greaser for relubrication made out of nickel-plated brass.

Support dimensions respect ISO 3228 set of rules.
Maximum shaft alignment error 2,5°
For further information please contact our technical office or sales department.

Oval flanged bearing supports

Technical data

Serie **UCFL/C**

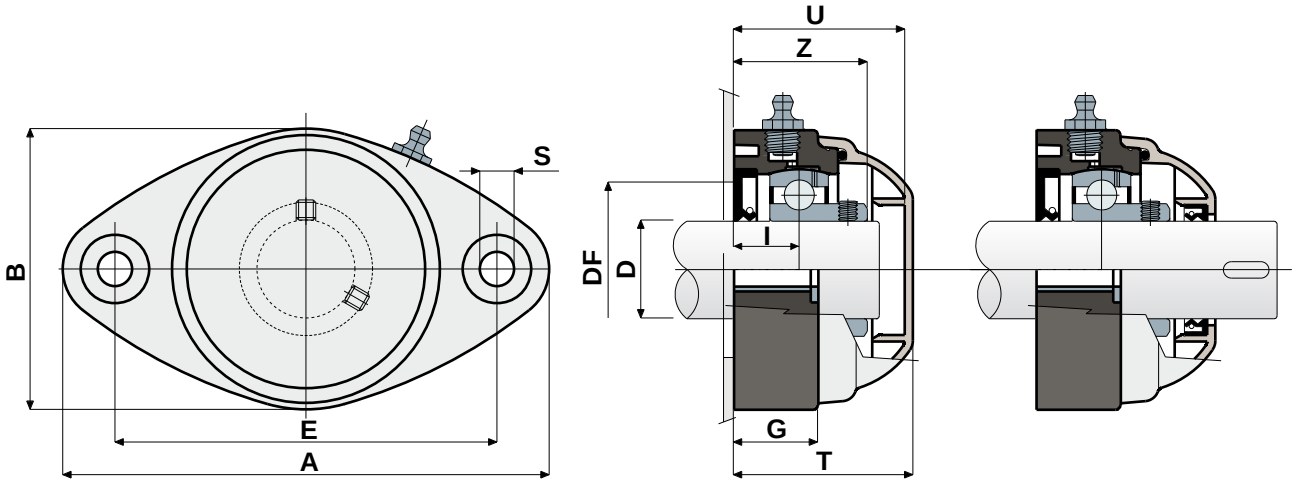

CLOSED TYPE

OPEN TYPE

CHROME STEEL BEARING																				
D	SERIE	CODES				DIMENSIONS (mm)											Bearing load (N)		Bearing support load	
		Black colour		White colour																
		Closed type	Open type	Closed type	Open type	E	A	B	S	G	I	Z	U	T	DF Max	DF Min	C	C0	(N)	
20	UCFL 204 C	80262	80263	84644	84645	90	118	64	10,5	19	15,5	33,5	44	46,5	45	40	12800	6600	8500	
25	UCFL 205 C	80067	80071	84646	84647	99	131	72	10,5	22	17	36	47	49	50	45	14000	7800	10000	
30	UCFL 206 C	80068	80072	84648	84649	117	149	86	10,5	26	20	41	54	56	60	50	19500	11300	13000	
35	UCFL 207 C	80069	80073	84650	84651	130	163	94	10,5	26	20	45	57	59	70	55	25500	15300	14000	
40	UCFL 208 C	85217	85218	85221	85222	144	172	100	10,5	27	19,5	48,5	65,5	71	78	65	30700	19000	15000	NEW

STAINLESS STEEL BEARING AISI 440																				
D	SERIE	CODES				DIMENSIONS (mm)											Bearing load (N)		Bearing support load	
		Black colour		White colour																
		Closed type	Open type	Closed type	Open type	E	A	B	S	G	I	Z	U	T	DF Max	DF Min	C	C0	(N)	
20	UCFL 204 C	81062	81063	84652	84653	90	118	64	10,5	19	15,5	33,5	44	46,5	45	40	8300	6550	8500	
25	UCFL 205 C	81064	81065	84654	84655	99	131	72	10,5	22	17	36	47	49	50	45	9150	7800	10000	
30	UCFL 206 C	81066	81067	84656	84657	117	149	86	10,5	26	20	41	54	56	60	50	12500	11200	13000	
35	UCFL 207 C	81068	81069	84658	84659	130	163	94	10,5	26	20	45	57	59	70	55	16600	15300	14000	
40	UCFL 208 C	85219	85220	85223	85224	144	172	100	10,5	27	19,5	48,5	65,5	71	78	65	20000	19000	15000	NEW

VERSIONS WITH MEASURES IN INCHES

CHROME STEEL BEARING																				
D		SERIE	CODES				DIMENSIONS (mm)											Bearing load (N)		Bearing support load
			Black colour		White colour															
(inches)	(mm)		Closed type	Open type	Closed type	Open type	E	A	B	S	G	I	Z	U	T	DF Max	DF Min	C	C0	(N)
1"	25,4	UCFL 205 C	84506	84507	84891	84892	99	131	72	10,5	22	17	36	47	49	50	45	14000	7800	10000
1"1/4	31,75	UCFL 206 C	84508	84509	84893	84894	117	149	86	10,5	26	20	41	54	56	60	50	19500	11300	13000

MATERIALS: Support made out of black or white colour PA + glass fiber; chrome steel or stainless steel bearing; greaser made out of nickel plated brass; reinforcement bushings and washers made out of stainless steel AISI 304; gaskets made out of NBR rubber; cover made out of polypropylene, grey colour RAL 7042.
FEATURES: Full protection of bearing against external agents. Assembly with not shouldered shafts. Maximum shaft alignment error 2.5°.
BOX QUANTITY: 8 pieces.
ON REQUEST: Versions with body in polypropylene + glass fiber and antibacterial additive; protection cover in different colours and with customized brand; box quantity according to your request; Viton gaskets, "Long life" bearings.

Oval flanged bearing supports

Serie **UCFL/CX**

Without protection cover

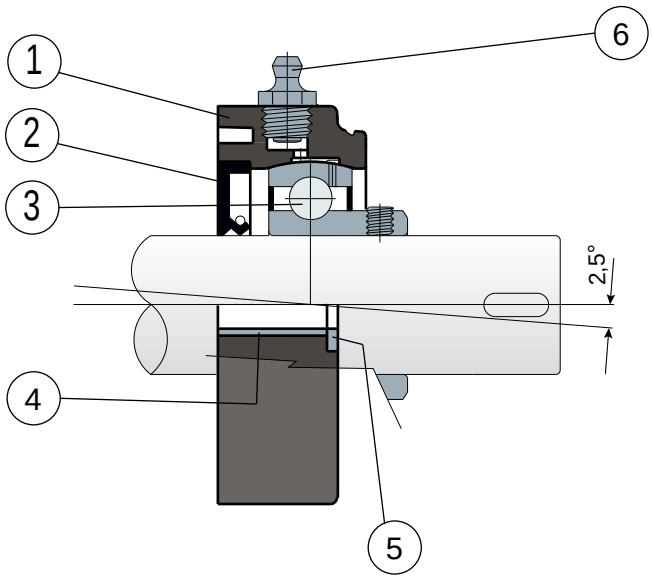

1) Support body made out of black or white polyamide reinforced with glass fibers.
2) Back gasket made out of NBR rubber for turning shaft seal.
3) Chrome steel or stainless steel bearing AISI 440.
4) Spacer for fixing reinforcement made out of stainless steel AISI 304.
5) UNI 6592 support washer made out of stainless steel AISI 304.
6) Greaser for relubrication made out of nickel-plated brass.

NOTE: The only difference from UCFL/C series is lack of protection cover, which can be ordered separately as an accessory.

Support dimensions respect ISO 3228 set of rules.
Maximum shaft alignment error 2,5°
For further information please contact our technical office or sales department.

Oval flanged bearing supports

Technical data

Serie **UCFL/CX**

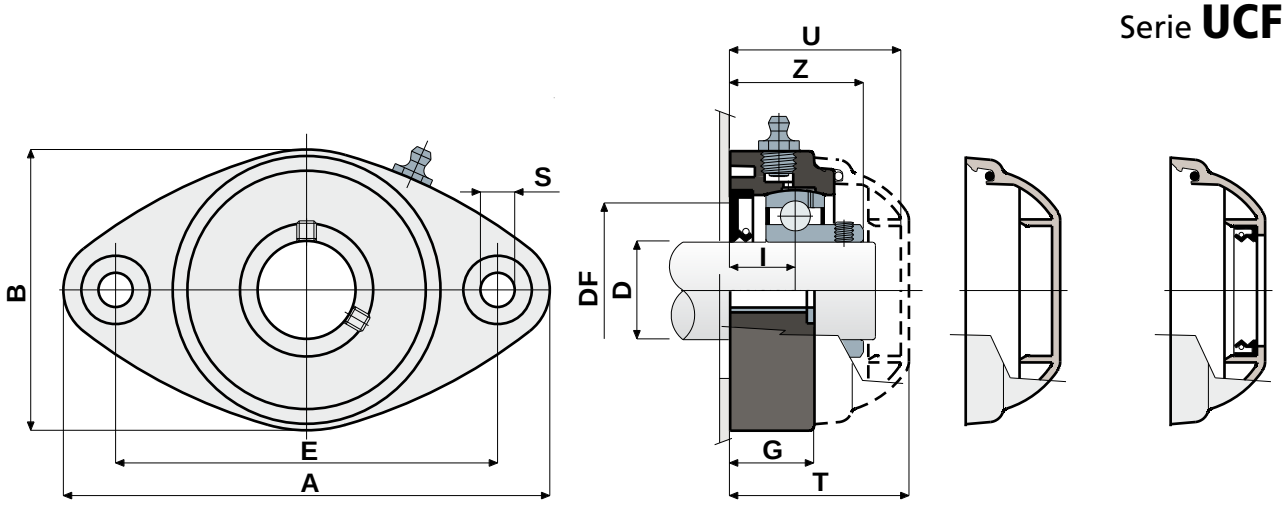

CLOSED TYPE

OPEN TYPE

CHROME STEEL BEARING																			
D	SERIE	Support CODES		DIMENSIONS (mm)											Bearing load (N)		Bearing support load	COVER CODES	
		Black colour	White colour	E	A	B	S	G	I	Z	U	T	DF Max	DF Min	C	C0	(N)	Closed type	Open type
20	UCFL 204 CX	80264	84660	90	118	64	10,5	19	15,5	33,5	44	46,5	45	40	12800	6600	8500	80254	80255
25	UCFL 205 CX	80181	84661	99	131	72	10,5	22	17	36	47	49	50	45	14000	7800	10000	80075	80076
30	UCFL 206 CX	80182	84662	117	149	86	10,5	26	20	41	54	56	60	50	19500	11300	13000	80011	80053
35	UCFL 207 CX	80183	84663	130	163	94	10,5	26	20	45	57	59	70	55	25500	15300	14000	80077	80078
40	UCFL 208 CX	85225	85227	144	172	100	10,5	27	19,5	48,5	65,5	71	78	65	30700	19000	15000	80256	80257

NEW

STAINLESS STEEL BEARING AISI 440																			
D	SERIE	Support CODES		DIMENSIONS (mm)											Bearing load (N)		Bearing support load	COVER CODES	
		Black colour	White colour	E	A	B	S	G	I	Z	U	T	DF Max	DF Min	C	C0	(N)	Closed type	Open type
20	UCFL 204 CX	81053	84664	90	118	64	10,5	19	15,5	33,5	44	46,5	45	40	8300	6550	8500	80254	80255
25	UCFL 205 CX	81054	84665	99	131	72	10,5	22	17	36	47	49	50	45	9150	7800	10000	80075	80076
30	UCFL 206 CX	81055	84666	117	149	86	10,5	26	20	41	54	56	60	50	12500	11200	13000	80011	80053
35	UCFL 207 CX	81056	84667	130	163	94	10,5	26	20	45	57	59	70	55	16600	15300	14000	80077	80078
40	UCFL 208 CX	85226	85228	144	172	100	10,5	27	19,5	48,5	65,5	71	78	65	20000	19000	15000	80256	80257

NEW

VERSIONS WITH MEASURES IN INCHES

CHROME STEEL BEARING																				
D		SERIE	Support CODES		DIMENSIONS (mm)											Bearing load (N)		Bearing support load	COVER CODES	
(inches)	(mm)		Black colour	White colour	E	A	B	S	G	I	Z	U	T	DF Max	DF Min	C	C0	(N)	Closed type	Open type
1"	25,4	UCFL 205 CX	84510	84899	99	131	72	10,5	22	17	36	47	49	50	45	14000	7800	10000	80075	85202
1"1/4	31,75	UCFL 206 CX	84511	84900	117	149	86	10,5	26	20	41	54	56	60	50	19500	11300	13000	80011	85203

MATERIALS: Support made out of black or white colour PA + glass fiber; chrome steel or stainless steel bearing; greaser made out of nickel plated brass; reinforcement bushings and washers made out of stainless steel AISI 304; gaskets made out of NBR rubber; cover made out of polypropylene, grey colour RAL 7042.
FEATURES: The difference from UCFL/C series is lack of protection cover which can be ordered separately as an accessory. Assembly with not shouldered shafts. Maximum shaft alignment error 2.5°.
BOX QUANTITY: 8 pieces.
ON REQUEST: Versions with body in polypropylene + glass fiber and antibacterial additive; protection cover in different colours and with customized brand; box quantity according to your request; Viton gaskets, "Long life" bearings.

Oval flanged bearing supports

Serie **UCFL**

Without cover and back gasket

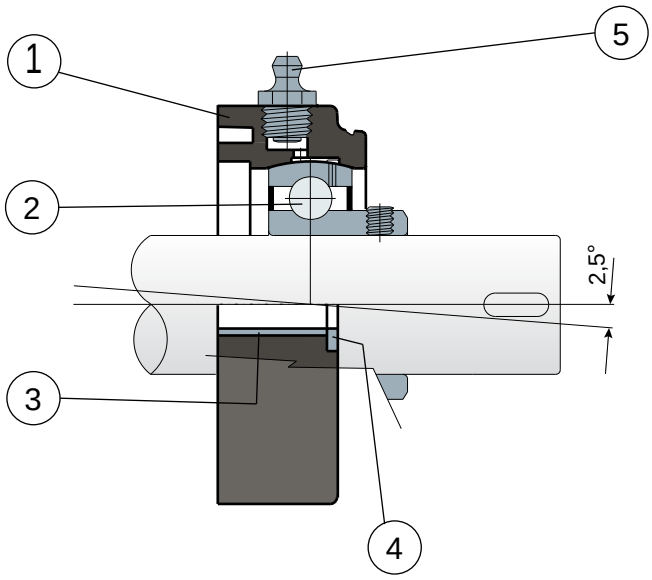

1) Support body made out of black or white polyamide reinforced with glass fibers.
2) Chrome steel or stainless steel bearing AISI 440.
3) Spacer for fixing reinforcement made out of stainless steel AISI 304.
4) UNI 6592 support washer made out of stainless steel AISI 304.
5) Greaser for relubrication made out of nickel-plated brass.

NOTE: The only difference from UCFL/C series is lack of back gasket and protection cover, which can be ordered separately as accessories.

Support dimensions respect ISO 3228 set of rules.
Maximum shaft alignment error 2,5°
For further information please contact our technical office or sales department.

Oval flanged bearing supports

Technical data

Serie **UCFL**

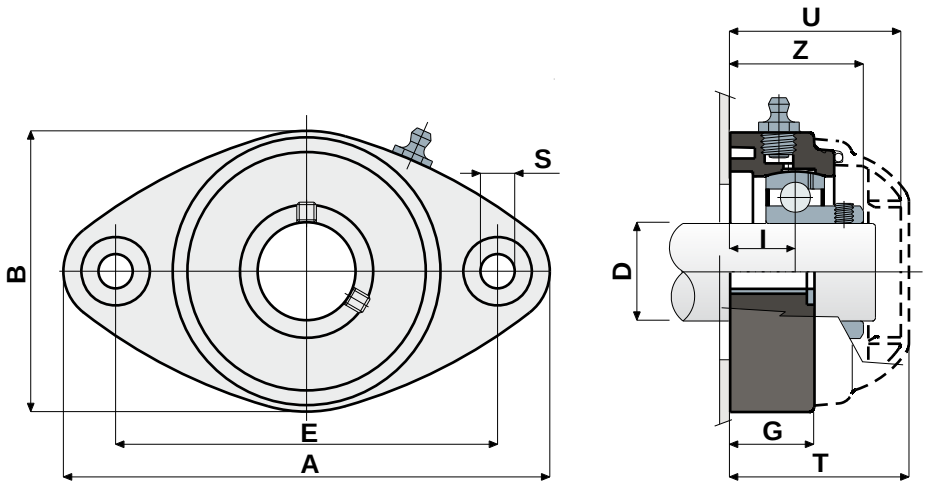

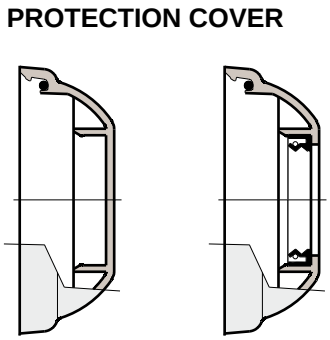

CHROME STEEL BEARING																	
		Support CODES		DIMENSIONS (mm)									Bearing load (N)		Bearing support load	COVER CODES	
D	SERIE	Black colour	White colour	E	A	B	S	G	I	Z	U	T	C	C0	(N)	Closed type	Open type
20	UCFL 204	**80265**	**84668**	90	118	64	10,5	19	15,5	33,5	44	46,5	12800	6600	8500	**80254**	**80255**
25	UCFL 205	**80063**	**84669**	99	131	72	10,5	22	17	36	47	49	14000	7800	10000	**80075**	**80076**
30	UCFL 206	**80064**	**84670**	117	149	86	10,5	26	20	41	54	56	19500	11300	13000	**80011**	**80053**
35	UCFL 207	**80065**	**84671**	130	163	94	10,5	26	20	45	57	59	25500	15300	14000	**80077**	**80078**
40	UCFL 208	**85229**	**85231**	144	172	100	10,5	27	19,5	48,5	65,5	71	30700	19000	15000	**80256**	**80257** NEW

STAINLESS STEEL BEARING AISI 440																	
		Support CODES		DIMENSIONS (mm)									Bearing load (N)		Bearing support load	COVER CODES	
D	SERIE	Black colour	White colour	E	A	B	S	G	I	Z	U	T	C	C0	(N)	Closed type	Open type
20	UCFL 204	**80519**	**84672**	90	118	64	10,5	19	15,5	33,5	44	46,5	8500	6550	8500	**80254**	**80255**
25	UCFL 205	**80520**	**84673**	99	131	72	10,5	22	17	36	47	49	9150	7800	10000	**80075**	**80076**
30	UCFL 206	**80521**	**84674**	117	149	86	10,5	26	20	41	54	56	12500	11200	13000	**80011**	**80053**
35	UCFL 207	**80522**	**84675**	130	163	94	10,5	26	20	45	57	59	16600	15300	14000	**80077**	**80078**
40	UCFL 208	**85230**	**85232**	144	172	100	10,5	27	19,5	48,5	65,5	71	20000	19000	15000	**80256**	**80257** NEW

VERSIONS WITH MEASURES IN INCHES

CHROME STEEL BEARING																		
D			Support CODES		DIMENSIONS (mm)									Bearing load (N)		Bearing support load	COVER CODES	
(inches)	(mm)	SERIE	Black colour	White colour	E	A	B	S	G	I	Z	U	T	C	C0	(N)	Closed type	Open type
1"	25,4	UCFL 205	**84513**	**84903**	99	131	72	10,5	22	17	36	47	49	14000	7800	10000	**80075**	**85202**
1"1/4	31,75	UCFL 206	**84514**	**84904**	117	149	86	10,5	26	20	41	54	56	19500	11300	13000	**80011**	**85203**

MATERIALS: Support made out of black or white colour PA + glass fiber; chrome steel or stainless steel bearing; greaser made out of nickel plated brass; reinforcement bushings and washers made out of stainless steel AISI 304; gaskets made out of NBR rubber; cover made out of polypropylene, grey colour RAL 7042.
FEATURES: The difference from UCFL/C series is lack of back gasket and protection cover, which can be ordered separately as accessories. Assembly with shouldered and not shouldered shafts. Maximum shaft alignment error 2.5°.
BOX QUANTITY: 8 pieces.
ON REQUEST: Versions with body in polypropylene + glass fiber and antibacterial additive; protection cover in different colours and with customized brand; box quantity according to your request; Viton gaskets, "Long life" bearings.

Oval flanged bearing supports

Serie **UCFL/CS**

NEW

New product line with support body in PA white colour.

Back gasket for shouldered shaft

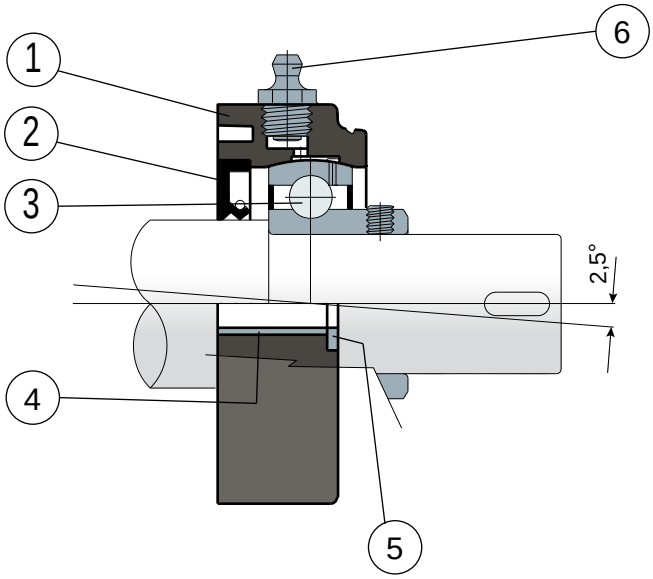

1) Support body made out of black or white polyamide reinforced with glass fibers.
2) Back gasket made out of NBR rubber for turning shaft seal.
3) Chrome steel or stainless steel bearing AISI 440.
4) Spacer for fixing reinforcement made out of stainless steel AISI 304.
5) UNI 6592 support washer made out of stainless steel AISI 304.
6) Greaser for relubrication made out of nickel-plated brass.

Support dimensions respect ISO 3228 set of rules.
Maximum shaft alignment error 2,5°
For further information please contact our technical office or sales department.

Oval flanged bearing supports

Technical data

Serie **UCFL/CS**

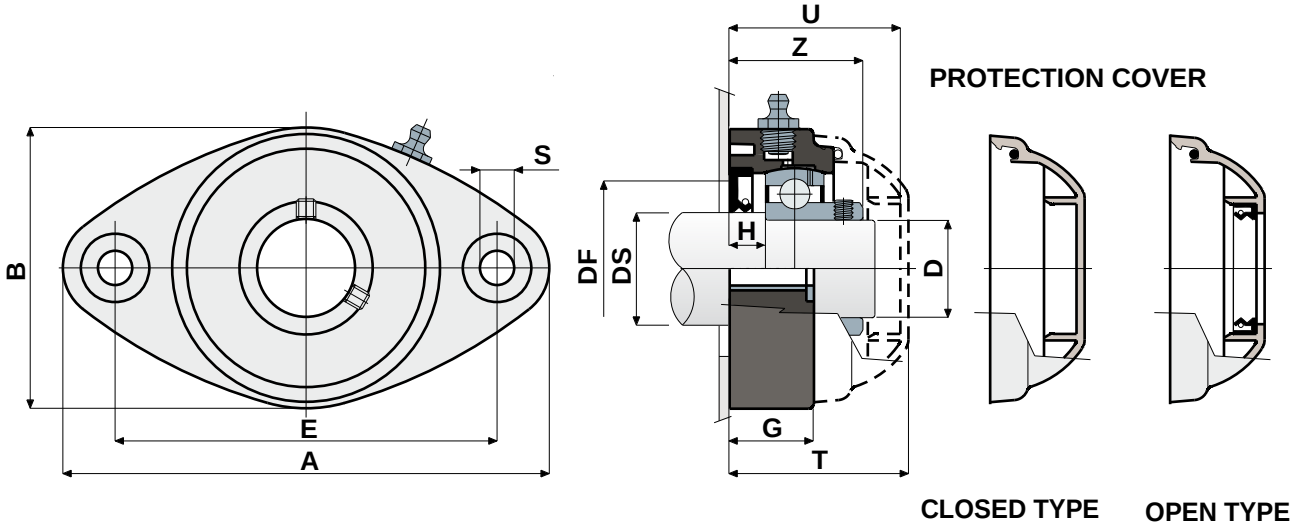

CHROME STEEL BEARING

DS	D	SERIE	Support CODES		DIMENSIONS (mm)											Bearing load (N)		Bearing support load	COVER CODES	
			Black colour	White colour	E	A	B	S	G	H	Z	U	T	DF Max	DF Min	C	C0	(N)	Closed type	Open type
25	20	UCFL 204 CS	80266	85264	90	118	64	10,5	19	8,5	33,5	44	46,5	45	40	12800	6600	8500	80254	80255
30	25	UCFL 205 CS	80184	85265	99	131	72	10,5	22	10	36	47	49	50	45	14000	7800	10000	80075	80076
35	30	UCFL 206 CS	80185	85266	117	149	86	10,5	26	11,5	41	54	56	60	50	19500	11300	13000	80011	80053
40	35	UCFL 207 CS	80186	85267	130	163	94	10,5	26	10,5	45	57	59	70	55	25500	15300	14000	80077	80078
45	40	UCFL 208 CS	85233	-	144	172	100	10,5	27	8,5	48,5	65,5	71	78	65	30700	19000	15000	80256	80257

STAINLESS STEEL BEARING AISI 440

DS	D	SERIE	Support CODES		DIMENSIONS (mm)											Bearing load (N)		Bearing support load	COVER CODES	
			Black colour	White colour	E	A	B	S	G	H	Z	U	T	DF Max	DF Min	C	C0	(N)	Closed type	Open type
25	20	UCFL 204 CS	84148	85268	90	118	64	10,5	19	8,5	33,5	44	46,5	45	40	8500	6550	8500	80254	80255
30	25	UCFL 205 CS	83907	85269	99	131	72	10,5	22	10	36	47	49	50	45	9150	7800	10000	80075	80076
35	30	UCFL 206 CS	80523	85270	117	149	86	10,5	26	11,5	41	54	56	60	50	12500	11200	13000	80011	80053
40	35	UCFL 207 CS	84150	85271	130	163	94	10,5	26	10,5	45	57	59	70	55	16600	15300	14000	80077	80078
45	40	UCFL 208 CS	85234	-	144	172	100	10,5	27	8,5	48,5	65,5	71	78	65	20000	19000	15000	80256	80257

MATERIALS: Support made out of PA + glass fiber black or white colour; chrome steel bearing; greaser made out of nickel plated brass; reinforcement bushings and washers made out of stainless steel AISI 304; gaskets made out of NBR rubber; cover made out of polypropylene, grey colour RAL 7042.
FEATURES: Back gasket for shouldered shafts; protection cover can be ordered separately as accessory. Use of shouldered shafts allows a higher capability of axial load. Maximum shaft alignment error 2.5°.
BOX QUANTITY: 8 pieces.
ON REQUEST: Versions with body in polypropylene + glass fiber and antibacterial additive; protection cover in different colours and with customized brand; box quantity according to your request; Viton gaskets, "Long life" bearings.

Oval flanged bearing supports

Serie **MUCFL/C**

Full protection of bearing

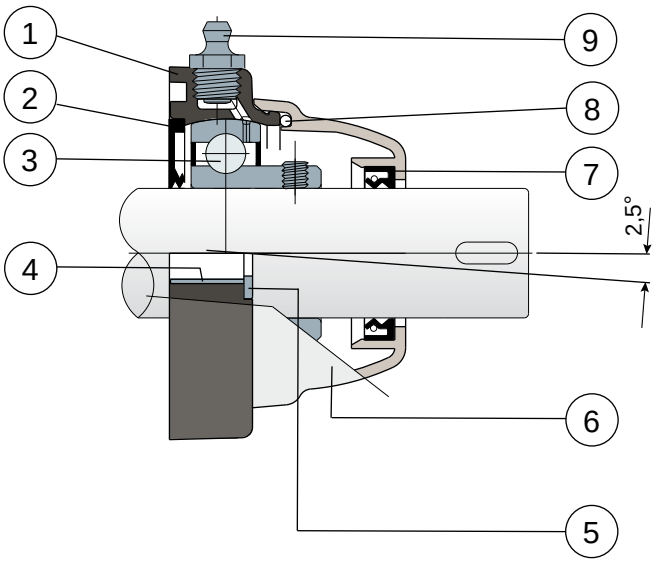

1) Support body made out of black or white polyamide reinforced with glass fibers.
2) Back gasket made out of NBR rubber for turning shaft seal.
3) Chrome steel or stainless steel bearing AISI 440.
4) Spacer for fixing reinforcement made out of stainless steel AISI 304.
5) UNI 6592 support washer made out of stainless steel AISI 304.
6) Protection cover made out of polypropylene (grey colour Ral 7042).
7) Front gasket made out of NBR rubber for turning shaft seal.
8) OR gasket made out of NBR rubber
9) Greaser for relubrication made out of nickel-plated brass.

Maximum shaft alignment error 2,5°
For further information please contact our technical office or sales department.

Oval flanged bearing supports

Technical data

Serie **MUCFL/C**

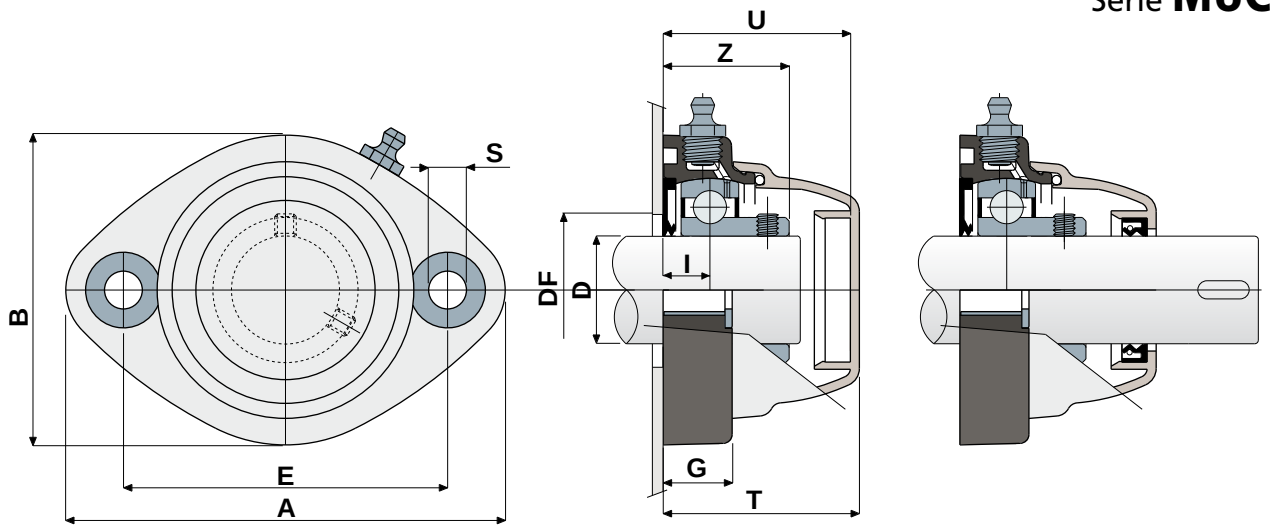

CLOSED TYPE

OPEN TYPE

CHROME STEEL BEARING																					
D	SERIE	CODES				DIMENSIONS (mm)											Bearing load (N)		Bearing support load
		Black colour		White colour															
		Closed type	Open type	Closed type	Open type	E	A	B	S	G	I	Z	U	T	DF Max	DF Min	C	C0	(N)
20	MUCFL 204 C	82858	82857	84676	84677	90	122	86	10,5	19	16	34	44	46,5	45	40	12800	6600	8500
25	MUCFL 205 C	82860	82859	84678	84679	90	122	86	10,5	19	15,5	35	44	46,5	50	45	14000	7800	10000
30	MUCFL 206 C	82409	82408	84680	84681	90	122	86	10,5	19	13	35	52	54,5	60	50	19500	11300	13000
35	MUCFL 207 C	84014	83989	84682	84683	117	147	112	10,5	27	20	45,3	57	59,6	70	55	25500	15300	14000
40	MUCFL 208 C	84015	83990	84684	84685	117	147	112	10,5	27	20	48,5	65,5	68	78	65	30700	19000	15000

STAINLESS STEEL BEARING AISI 440																					
D	SERIE	CODES				DIMENSIONS (mm)											Bearing load (N)		Bearing support load
		Black colour		White colour															
		Closed type	Open type	Closed type	Open type	E	A	B	S	G	I	Z	U	T	DF Max	DF Min	C	C0	(N)
20	MUCFL 204 C	82870	82869	84686	84687	90	122	86	10,5	19	16	34	44	46,5	45	40	8300	6550	8500
25	MUCFL 205 C	82868	82867	84688	84689	90	122	86	10,5	19	15,5	35	44	46,5	50	45	9150	7800	10000
30	MUCFL 206 C	82767	82766	84690	84691	90	122	86	10,5	19	13	35	52	54,5	60	50	12500	11200	13000
35	MUCFL 207 C	84017	84018	84692	84693	117	147	112	10,5	27	20	45,3	57	59,6	70	55	16600	15300	14000
40	MUCFL 208 C	84016	83991	84694	84695	117	147	112	10,5	27	20	48,5	65,5	68	78	65	20000	19000	15000

VERSIONS WITH MEASURES IN INCHES

CHROME STEEL BEARING																					
D		SERIE	CODES				DIMENSIONS (mm)											Bearing load (N)		Bearing support load
			Black colour		White colour															
(inches)	(mm)		Closed type	Open type	Closed type	Open type	E	A	B	S	G	I	Z	U	T	DF Max	DF Min	C	C0	(N)
1"	25,4	MUCFL 205 C	84515	84539	84979	84980	90	122	86	10,5	19	15,5	35	44	46,5	50	45	14000	7800	10000
1"1/4	31,75	MUCFL 206 C	84516	84540	84981	84982	90	122	86	10,5	19	13	35	52	54,5	60	50	19500	11300	13000

MATERIALS: Support made out of black or white colour PA + glass fiber; chrome steel or stainless steel bearing, greaser made out of nickel plated brass; reinforcement bushings and washers made out of stainless steel AISI 304; gaskets made out of NBR rubber; cover made out of polypropylene, grey colour RAL 7042.
FEATURES: Full protection of bearing against external agents. Assembly with not shouldered shafts. Maximum shaft alignment error 2.5°.
BOX QUANTITY: 8 pieces.
ON REQUEST: Versions with body in polypropylene + glass fiber and antibacterial additive; protection cover in different colours and with customized brand; box quantity according to your request; Viton gaskets, "Long life" bearings.

Oval flanged bearing supports

Serie **MUCFL/CX**

Without protection cover

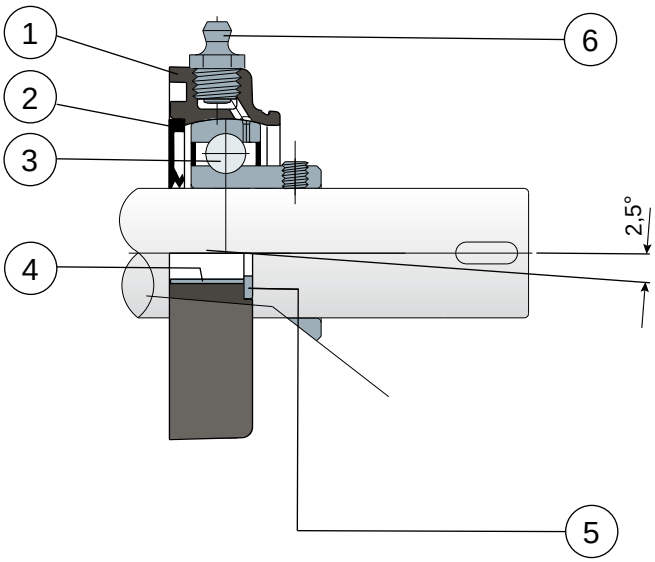

1) Support body made out of black or white polyamide reinforced with glass fibers.
2) Back gasket made out of NBR rubber for turning shaft seal.
3) Chrome steel or stainless steel bearing AISI 440.
4) Spacer for fixing reinforcement made out of stainless steel AISI 304.
5) UNI 6592 support washer made out of stainless steel AISI 304.
6) Greaser for relubrication made out of nickel-plated brass.

NOTE: The only difference from MUCFL/C series is lack of protection cover, which can be ordered separately as an accessory.

Maximum shaft alignment error 2,5°
For further information please contact our technical office or sales department.

Oval flanged bearing supports

Technical data

Serie **MUCFL/CX**

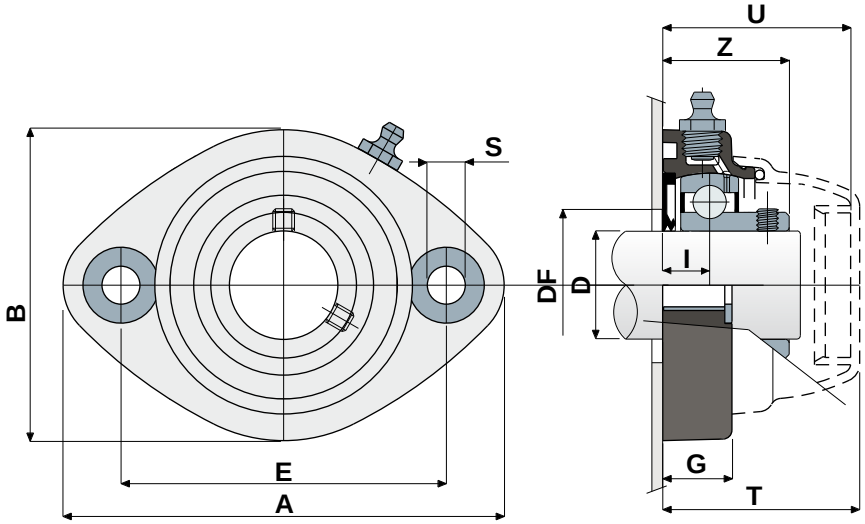

PROTECTION COVER

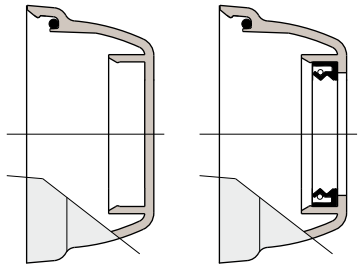

CLOSED TYPE OPEN TYPE

CHROME STEEL BEARING																			
D	SERIE	Support CODES		DIMENSIONS (mm)											Bearing load (N)		Bearing support load	COVER CODES	
		Black colour	White colour	E	A	B	S	G	I	Z	U	T	DF Max	DF Min	C	C0	(N)	Closed type	Open type
20	MUCFL 204 CX	83035	84696	90	122	86	10,5	19	16	34	44	46,5	45	40	12800	6600	8500	80254	80255
25	MUCFL 205 CX	83036	84697	90	122	86	10,5	19	15,5	35	44	46,5	50	45	14000	7800	10000	80075	80076
30	MUCFL 206 CX	80540	84698	90	122	86	10,5	19	13	35	52	54,5	60	50	19500	11300	13000	82765	82764
35	MUCFL 207 CX	83992	84699	117	147	112	10,5	27	20	45,3	57	59,6	70	55	25500	15300	14000	80077	80078
40	MUCFL 208 CX	83993	84700	117	147	112	10,5	27	20	48,5	65,5	68	78	65	30700	19000	15000	80256	80257

STAINLESS STEEL BEARING AISI 440																			
D	SERIE	Support CODES		DIMENSIONS (mm)											Bearing load (N)		Bearing support load	COVER CODES	
		Black colour	White colour	E	A	B	S	G	I	Z	U	T	DF Max	DF Min	C	C0	(N)	Closed type	Open type
20	MUCFL 204 CX	83045	84701	90	122	86	10,5	19	16	34	44	46,5	45	40	8300	6550	8500	80254	80255
25	MUCFL 205 CX	83046	84702	90	122	86	10,5	19	15,5	35	44	46,5	50	45	9150	7800	10000	80075	80076
30	MUCFL 206 CX	83047	84703	90	122	86	10,5	19	13	35	52	54,5	60	50	12500	11200	13000	82765	82764
35	MUCFL 207 CX	84019	84704	117	147	112	10,5	27	20	45,3	57	59,6	70	55	16600	15300	14000	80077	80078
40	MUCFL 208 CX	83994	84705	117	147	112	10,5	27	20	48,5	65,5	68	78	65	20000	19000	15000	80256	80257

VERSIONS WITH MEASURES IN INCHES

CHROME STEEL BEARING																				
D		SERIE	Support CODES		DIMENSIONS (mm)											Bearing load (N)		Bearing support load	COVER CODES	
(inches)	(mm)		Black colour	White colour	E	A	B	S	G	I	Z	U	T	DF Max	DF Min	C	C0	(N)	Closed type	Open type
1"	25,4	MUCFL 205 CX	84517	84983	90	122	86	10,5	19	15,5	35	44	46,5	50	45	14000	7800	10000	80075	85202
1"1/4	31,75	MUCFL 206 CX	84518	84984	90	122	86	10,5	19	13	35	52	54,5	60	50	19500	11300	13000	82765	85206

MATERIALS: Support made out of black or white colour PA + glass fiber; chrome steel or stainless steel bearing; greaser made out of nickel plated brass; reinforcement bushings and washers made out of stainless steel AISI 304; gaskets made out of NBR rubber; cover made out of polypropylene, grey colour RAL 7042.
FEATURES: The difference from MUCFL/C series is lack of protection cover which can be ordered separately as an accessory. Assembly with not shouldered shafts. Maximum shaft alignment error 2.5°.
BOX QUANTITY: 8 pieces.
ON REQUEST: Versions with body in polypropylene + glass fiber and antibacterial additive; protection cover in different colours and with customized brand; box quantity according to your request; Viton gaskets, "Long life" bearings.

Oval flanged bearing supports

Serie **MUCFL**

Without cover and back gasket

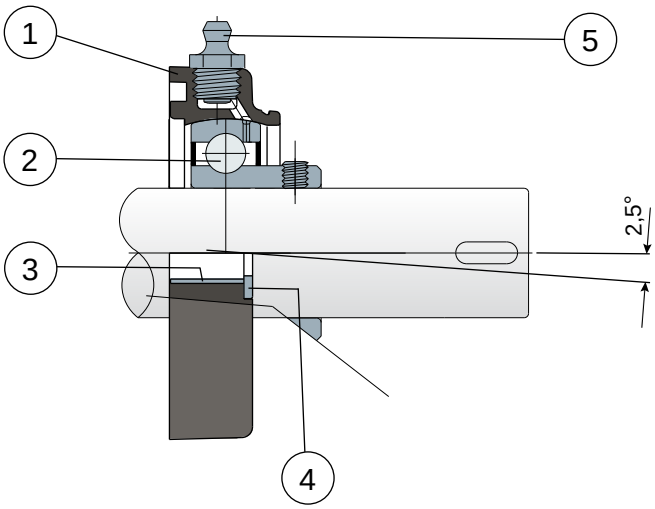

1) Support body made out of black or white polyamide reinforced with glass fibers.
2) Chrome steel or stainless steel bearing AISI 440.
3) Spacer for fixing reinforcement made out of stainless steel AISI 304.
4) UNI 6592 support washer made out of stainless steel AISI 304.
5) Greaser for relubrication made out of nickel-plated brass.

NOTE: The only difference from MUCFL/C series is lack of back gasket and protection cover, which can be ordered separately as accessories.

Maximum shaft alignment error 2,5°
For further information please contact our technical office or sales department.

Oval flanged bearing supports

Technical data

Serie **MUCFL**

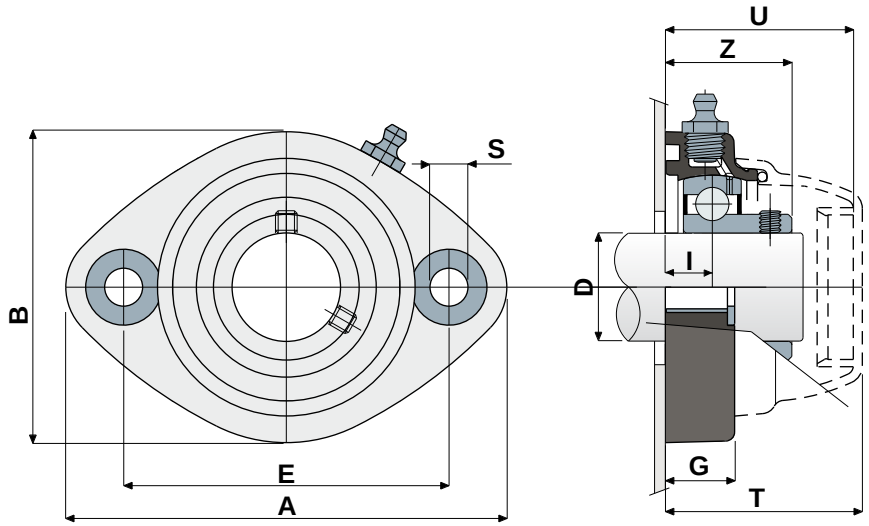

PROTECTION COVER

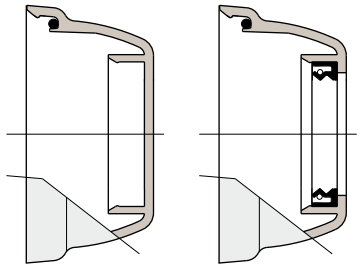

CLOSED TYPE **OPEN TYPE**

CHROME STEEL BEARING																	
D	SERIE	Support CODES		DIMENSIONS (mm)									Bearing load (N)		Bearing support load	COVER CODES	
		Black colour	White colour	E	A	B	S	G	I	Z	U	T	C	C0	(N)	Closed type	Open type
20	MUCFL 204	**83037**	**84706**	90	122	86	10,5	19	16	34	44	46,5	12800	6600	8500	**80254**	**80255**
25	MUCFL 205	**83038**	**84707**	90	122	86	10,5	19	15,5	35	44	46,5	14000	7800	10000	**80075**	**80076**
30	MUCFL 206	**80542**	**84708**	90	122	86	10,5	19	13	35	52	54,5	19500	11300	13000	**82765**	**82764**
35	MUCFL 207	**83995**	**84709**	117	147	112	10,5	27	20	45,3	57	59,6	25500	15300	14000	**80077**	**80078**
40	MUCFL 208	**83996**	**84710**	117	147	112	10,5	27	20	48,5	65,5	68	30700	19000	15000	**80256**	**80257**

STAINLESS STEEL BEARING AISI 440																	
D	SERIE	Support CODES		DIMENSIONS (mm)									Bearing load (N)		Bearing support load	COVER CODES	
		Black colour	White colour	E	A	B	S	G	I	Z	U	T	C	C0	(N)	Closed type	Open type
20	MUCFL 204	**83048**	**84711**	90	122	86	10,5	19	16	34	44	46,5	8300	6550	8500	**80254**	**80255**
25	MUCFL 205	**83049**	**84712**	90	122	86	10,5	19	15,5	35	44	46,5	9150	7800	10000	**80075**	**80076**
30	MUCFL 206	**83050**	**84713**	90	122	86	10,5	19	13	35	52	54,5	12500	11200	13000	**82765**	**82764**
35	MUCFL 207	**84020**	**84714**	117	147	112	10,5	27	20	45,3	57	59,6	16600	15300	14000	**80077**	**80078**
40	MUCFL 208	**83997**	**84715**	117	147	112	10,5	27	20	48,5	65,5	68	20000	19000	15000	**80256**	**80257**

VERSIONS WITH MEASURES IN INCHES

CHROME STEEL BEARING																			
D		SERIE	Support CODES		DIMENSIONS (mm)									Bearing load (N)		Bearing support load	COVER CODES	
(inches)	(mm)		Black colour	White colour	E	A	B	S	G	I	Z	U	T	C	C0	(N)	Closed type	Open type
1"	25,4	MUCFL 205	**84519**	**84985**	90	122	86	10,5	19	15,5	35	44	46,5	14000	7800	10000	**80075**	**85202**
1"1/4	31,75	MUCFL 206	**84520**	**84986**	90	122	86	10,5	19	13	35	52	54,5	19500	11300	13000	**82765**	**85206**

MATERIALS: Support made out of black or white colour PA + glass fiber; chrome steel or stainless steel bearing; greaser made out of nickel plated brass; reinforcement bushings and washers made out of stainless steel AISI 304; gaskets made out of NBR rubber; cover made out of polypropylene, grey colour RAL 7042.
FEATURES: The difference from MUCFL/C series is lack of back gasket and protection cover, which can be ordered separately as accessories. Assembly with shouldered and not shouldered shafts. Maximum shaft alignment error 2.5°.
BOX QUANTITY: 8 pieces.
ON REQUEST: Versions with body in polypropylene + glass fiber and antibacterial additive; protection cover in different colours and with customized brand; box quantity according to your request; Viton gaskets, "Long life" bearings.

Oval flanged bearing supports

Serie **UCFL/CA**

External cover made out of stainless steel AISI 304

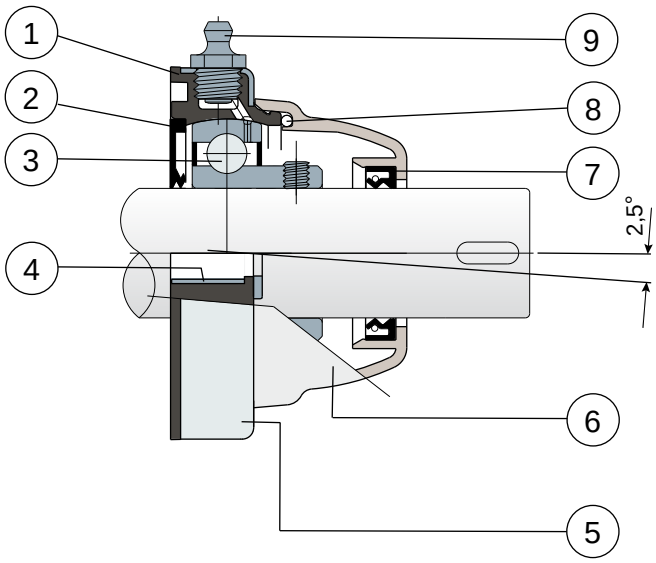

1) Internal body of support made out of polypropylene reinforced with glass fibers.
2) Back gasket made out of NBR rubber for turning shaft seal.
3) Chrome steel or stainless steel bearing AISI 440.
4) Spacer for fixing reinforcement made out of stainless steel AISI 304.
5) External cover of support made out of AISI 304 stainless steel.
6) Protection cover made out of polypropylene (grey colour Ral 7042).
7) Front gasket made out of NBR rubber for turning shaft seal.
8) OR gasket made out of NBR rubber
9) Greaser for relubrication made out of nickel-plated brass.

Maximum shaft alignment error 2,5°
For further information please contact our technical office or sales department.

Oval flanged bearing supports

Technical data

Serie **UCFL/CA**

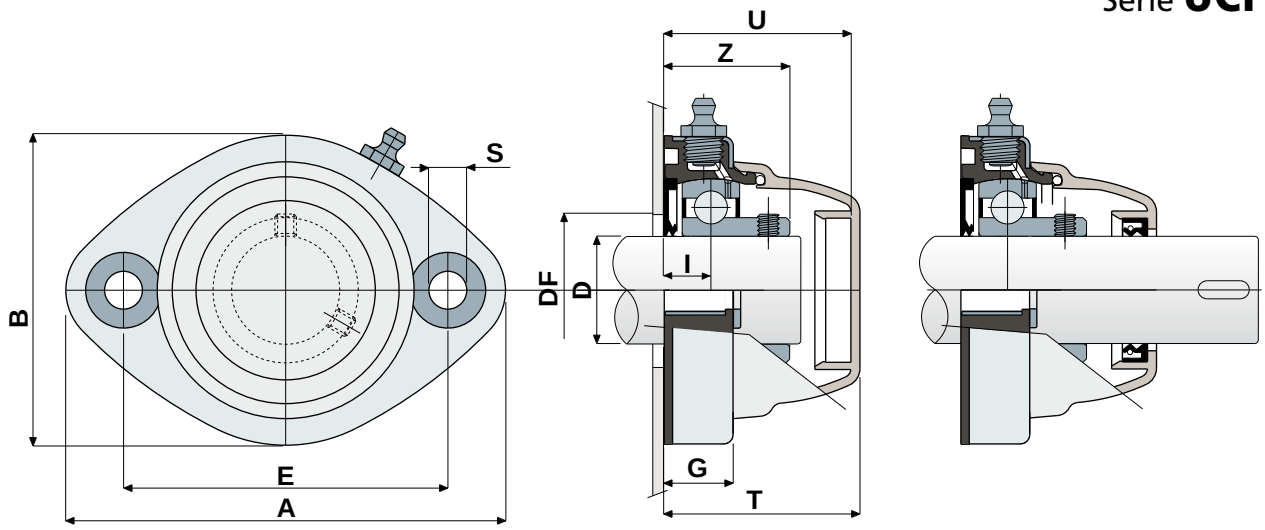

CLOSED TYPE

OPEN TYPE

CHROME STEEL BEARING																		
D (mm)	SERIE	CODES		DIMENSIONS (mm)											Bearing load (N)		Bearing support load
		Closed type	Open type	E	A	B	S	G	I	Z	U	T	DF Max	DF Min	C	C0	(N)
30	UCFL 206 CA	84021	83999	117	147	112	11	27	21	42	65,5	68	60	50	19500	11300	13000
35	UCFL 207 CA	84022	84000	117	147	112	11	27	20	45,3	65,5	68	70	55	25500	15300	14000
40	UCFL 208 CA	84023	84001	117	147	112	11	27	20	48,5	65,5	68	78	65	30700	19000	15000

STAINLESS STEEL BEARING AISI 440																		
D (mm)	SERIE	CODES		DIMENSIONS (mm)											Bearing load (N)		Bearing support load
		Closed type	Open type	E	A	B	S	G	I	Z	U	T	DF Max	DF Min	C	C0	(N)
30	UCFL 206 CA	84024	84002	117	147	112	11	27	21	42	65,5	68	60	50	12500	11200	13000
35	UCFL 207 CA	84006	84003	117	147	112	11	27	20	45,3	65,5	68	70	55	16600	15300	14000
40	UCFL 208 CA	84010	84005	117	147	112	11	27	20	48,5	65,5	68	78	65	20000	19000	15000

VERSIONS WITH MEASURES IN INCHES

CHROME STEEL BEARING																			
D		SERIE	CODES		DIMENSIONS (mm)											Bearing load (N)		Bearing support load
(inches)	(mm)		Closed type	Open type	E	A	B	S	G	I	Z	U	T	DF Max	DF Min	C	C0	(N)
1"1/4	31,75	UCFL 206 CA	84521	84541	117	147	112	11	27	21	42	65,5	68	60	50	19500	11300	13000

MATERIALS: Support made out of PP + glass fiber; external cover of support made out of AISI 304 stainless steel; chrome steel or stainless steel bearing; greaser made out of nickel plated brass; reinforcement bushings made out of AISI 304 stainless steel; gaskets made out of NBR rubber; protection cover made out of polypropylene grey colour RAL 7042.
FEATURES: Full protection of bearing against external agents. Support body made out of polypropylene covered by an AISI 304 stainless steel later, to obtain the maximum chemical resistance to antibacterial detergents used in food processing field. More over this part is moulded without internal cavities in order to obtain the best sanification. Assembly with not shouldered shaft. Maximum shaft alignment error 2.5°.
BOX QUANTITY: 8 pieces.
ON REQUEST: Protection covers in different colours and with customized brand; internal body in reinforced polypropylene white colour; box quantity according to your request; Viton gaskets, "Long life" bearings.

Self-aligning bearings with Solid body: completely closed surface to guarantee the max hygiene.

Oval flanged bearing supports

Serie **UCFL/CXA**

External cover made out of stainless steel AISI 304; without protection cover

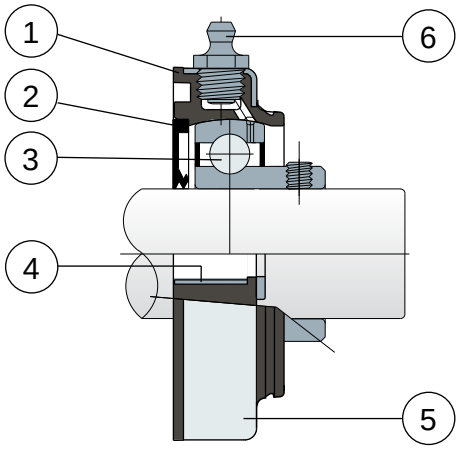

1) Internal body of support made out of polypropylene reinforced with glass fibers.
2) Back gasket made out of NBR rubber for turning shaft seal.
3) Chrome steel or stainless steel bearing AISI 440.
4) Spacer for fixing reinforcement made out of stainless steel AISI 304.
5) External cover of support made out of AISI 304 stainless steel.
6) Greaser for relubrication made out of nickel-plated brass.

NOTE: The only difference from UCFL/CA series is lack of protection cover, which can be ordered separately as an accessory.

Maximum shaft alignment error 2,5°
For further information please contact our technical office or sales department.

Oval flanged bearing supports

Technical data

Serie **UCFL/CXA**

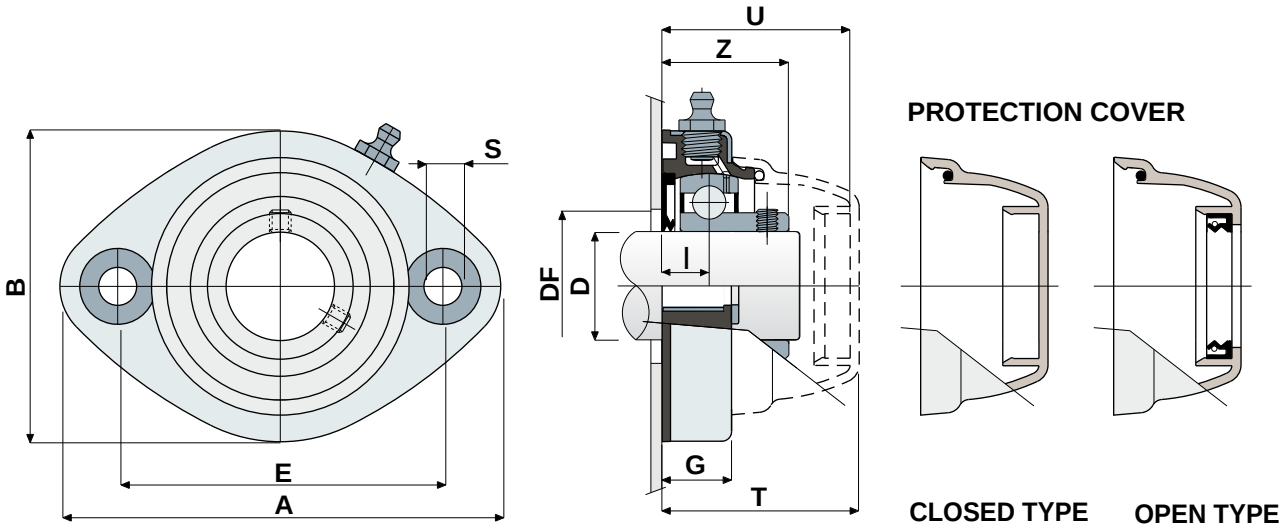

CHROME STEEL BEARING																			
D (mm)	SERIE	Support CODES	DIMENSIONS (mm)											Bearing load (N)		Bearing support load	COVER CODES	
			E	A	B	S	G	I	Z	U	T	DF Max	DF Min	C	C0	(N)	Closed type	Open type
30	UCFL 206 CXA S	**84007**	117	147	112	11	27	21	42	65,5	68	60	50	19500	11300	13000		**80494**
35	UCFL 207 CXA S	**84008**	117	147	112	11	27	20	45,3	65,5	68	70	55	25500	15300	14000	**80256**	**80495**
40	UCFL 208 CXA S	**84009**	117	147	112	11	27	20	48,5	65,5	68	78	65	30700	19000	15000		**80257**

STAINLESS STEEL BEARING AISI 440																			
D (mm)	SERIE	Support CODES	DIMENSIONS (mm)											Bearing load (N)		Bearing support load	COVER CODES	
			E	A	B	S	G	I	Z	U	T	DF Max	DF Min	C	C0	(N)	Closed type	Open type
30	UCFL 206 CXA S	**84011**	117	147	112	11	27	21	42	65,5	68	60	50	12500	11200	13000		**80494**
35	UCFL 207 CXA S	**84012**	117	147	112	11	27	20	45,3	65,5	68	70	55	16600	15300	14000	**80256**	**80495**
40	UCFL 208 CXA S	**84013**	117	147	112	11	27	20	48,5	65,5	68	78	65	20000	19000	15000		**80257**

VERSIONS WITH MEASURES IN INCHES

CHROME STEEL BEARING																				
D		SERIE	Support CODES	DIMENSIONS (mm)											Bearing load (N)		Bearing support load	COVER CODES	
(inches)	(mm)			E	A	B	S	G	I	Z	U	T	DF Max	DF Min	C	C0	(N)	Closed type	Open type
1"1/4	31,75	UCFL 206 CXA S	**84522**	117	147	112	11	27	21	42	65,5	68	60	50	19500	11300	13000	**80256**	**85204**

MATERIALS: Support made out of PP + glass fiber; external cover of support made out of AISI 304 stainless steel; chrome steel or stainless steel bearing; greaser made out of nickel plated brass; reinforcement bushings made out of AISI 304 stainless steel; gaskets made out of NBR rubber; protection cover made out of polypropylene grey colour RAL 7042.
FEATURES: The only difference from UCFL/CA series is lack of protection cover, which can be ordered separately as an accessory. Support body made out of polypropylene covered by an AISI 304 stainless steel later, to obtain the maximum chemical resistance to antibacterial detergents used in food processing field. More over this part is moulded without internal cavities in order to obtain the best sanification. Assembly with not shouldered shaft. Maximum shaft alignment error 2.5°.
BOX QUANTITY: 8 pieces.
ON REQUEST: Protection covers in different colours and with customized brand; internal body in reinforced polypropylene white colour; box quantity according to your request; Viton gaskets, "Long life" bearings.

S Self-aligning bearings with Solid body: completely closed surface to guarantee the max hygiene.

Side flanged bearing supports

Serie **UCFB/C**

Full protection of bearing

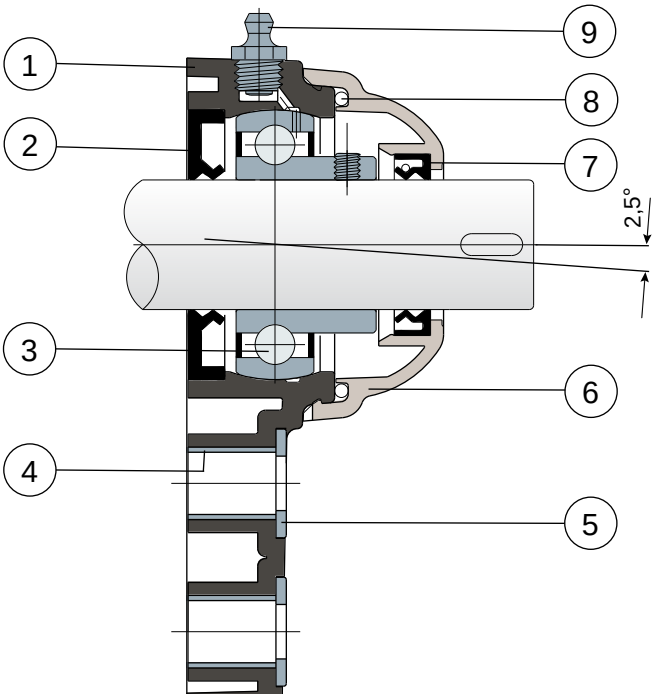

1) Support body made out of black or white polyamide reinforced with glass fibers.
2) Back gasket made out of NBR rubber for turning shaft seal.
3) Chrome steel or stainless steel bearing AISI 440.
4) Spacer for fixing reinforcement made out of stainless steel AISI 304.
5) UNI 6592 support washer made out of stainless steel AISI 304.
6) Protection cover made out of polypropylene (grey colour Ral 7042).
7) Front gasket made out of NBR rubber for turning shaft seal.
8) OR gasket made out of NBR rubber
9) Greaser for relubrication made out of nickel-plated brass.

Maximum shaft alignment error 2,5°
For further information please contact our technical office or sales department.

Side flanged bearing supports

Technical data

Serie **UCFB/C**

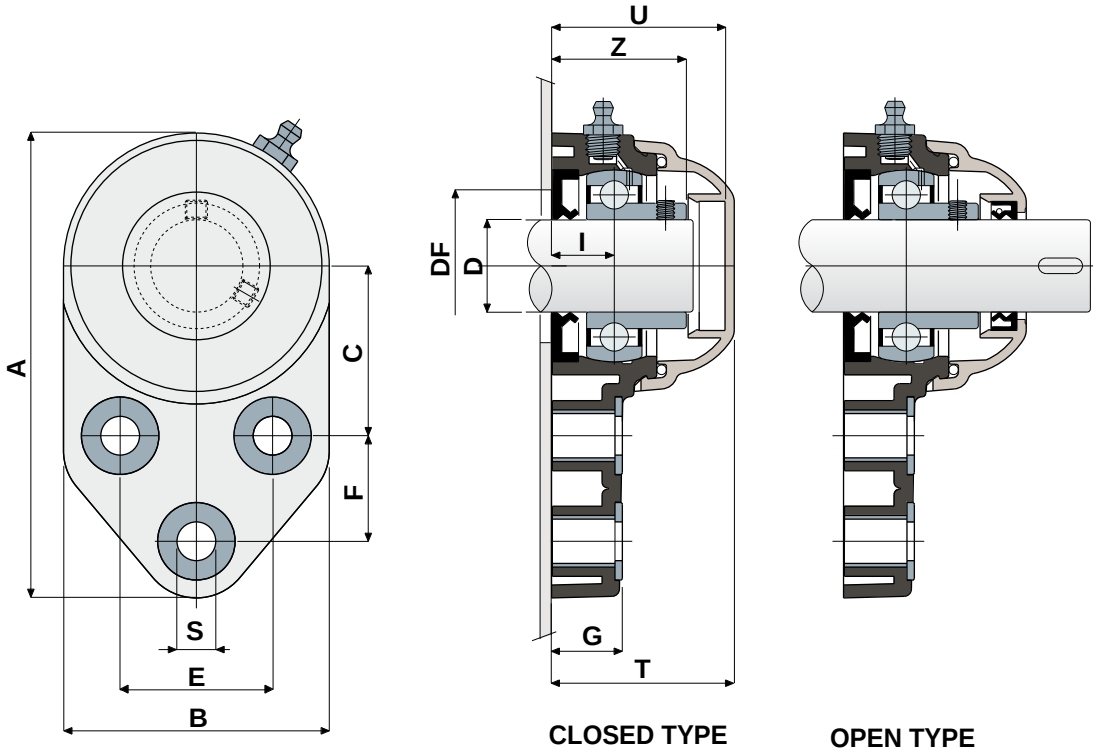

D	SERIE	CODES Black colour Closed type	CODES Black colour Open type	CODES White colour Closed type	CODES White colour Open type	DIMENSIONS (mm) E	A	B	C	F	S	G	I	Z	U	T	DF Max	DF Min	Bearing load (N) C	C0	Bearing support load (N)
		CHROME STEEL BEARING																			
20	UCFB 204 C	82862	82861	84718	84719	41,3	126	72	46	28,6	10,5	19	18	36	47	49,5	45	40	12800	6600	8500
25	UCFB 205 C	82771	82770	84720	84721	41,3	126	72	46	28,6	10,5	19	17	36,5	47	49,5	50	45	14000	7800	9000
30	UCFB 206 C	84048	84049	84722	84723	47,6	142	85	52,4	32	10,5	26,3	20,7	41,7	53,2	55,7	60	50	19500	11200	11000
35	UCFB 207 C	84050	84051	84724	84725	51	155	94	60,5	32	10,5	26,3	20	45,3	56,5	59	70	55	25500	15300	13000
40	UCFB 208 C	83031	83033	84726	84727	50	165	100	60,5	41	10,5	26,3	19,5	48,5	65,5	68	78	65	30700	19000	18000

D	SERIE	CODES Black colour Closed type	CODES Black colour Open type	CODES White colour Closed type	CODES White colour Open type	DIMENSIONS (mm) E	A	B	C	F	S	G	I	Z	U	T	DF Max	DF Min	Bearing load (N) C	C0	Bearing support load (N)
		STAINLESS STEEL BEARING AISI 440																			
20	UCFB 204 C	82866	82865	84728	84729	41,3	126	72	46	28,6	10,5	19	18	36	47	49,5	45	40	10800	6600	8500
25	UCFB 205 C	82775	82774	84730	84731	41,3	126	72	46	28,6	10,5	19	17	36,5	47	49,5	50	45	11900	7800	9000
30	UCFB 206 C	84052	84053	84732	84733	47,6	142	85	52,4	32	10,5	26,3	20,7	41,7	53,2	55,7	60	50	16250	11200	11000
35	UCFB 207 C	84054	84055	84734	84735	51	155	94	60,5	32	10,5	26,3	20	45,3	56,5	59	70	55	21600	15300	13000
40	UCFB 208 C	83040	83027	84736	84737	50	165	100	60,5	41	10,5	26,3	19,5	48,5	65,5	68	78	65	26000	19000	18000

VERSIONS WITH MEASURES IN INCHES

D (inches)	D (mm)	SERIE	CODES Black colour Closed type	CODES Black colour Open type	CODES White colour Closed type	CODES White colour Open type	DIMENSIONS (mm) E	A	B	C	F	S	G	I	Z	U	T	DF Max	DF Min	Bearing load (N) C	C0	Bearing support load (N)
			CHROME STEEL BEARING																			
1"	25,4	UCFB 205 C	84523	84524	84907	84908	41,3	126	72	46	28,6	10,5	19	17	36,5	47	49,5	50	45	14000	7800	9000
1"1/4	31,75	UCFB 206 C	84525	84526	84909	84910	47,6	142	85	52,4	32	10,5	26,3	20,7	41,7	53,2	55,7	60	50	19500	11300	11000

MATERIALS: Support made out of black or white colour PA + glass; chrome steel or stainless steel bearing, greaser made out of nickel plated brass; reinforcement bushings and washers made out of stainless steel AISI 304; gaskets made out of NBR rubber; cover made out of polypropylene, grey colour RAL 7042.
FEATURES: Full protection of bearing against external agents. Assembly with not shouldered shafts. Maximum shaft alignment error 2.5°.
BOX QUANTITY: 8 pieces.
ON REQUEST: Versions with body in polypropylene + glass fiber and antibacterial additive; protection cover in different colours and with customized brand; box quantity according to your request; Viton gaskets, "Long life" bearings.

Side flanged bearing supports

Serie **UCFB/CX**

Without protection cover

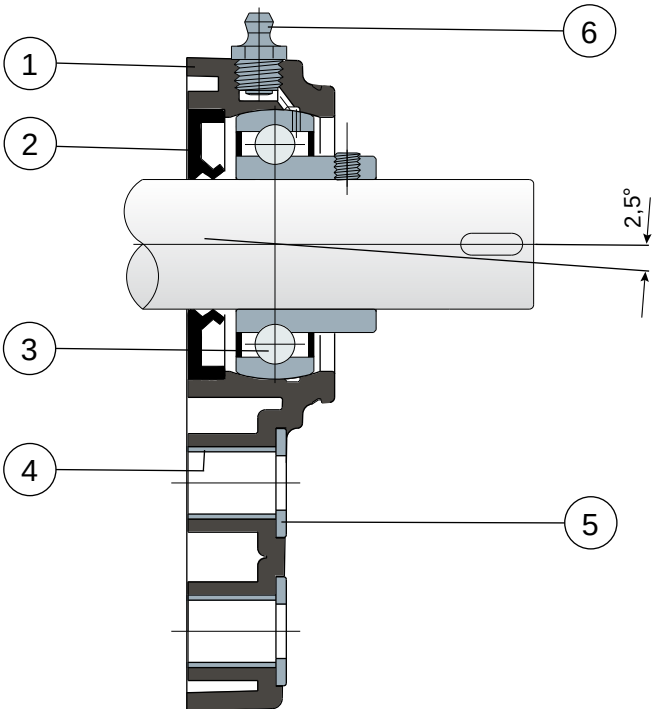

1) Support body made out of black or white polyamide reinforced with glass fibers.
2) Back gasket made out of NBR rubber for turning shaft seal.
3) Chrome steel or stainless steel bearing AISI 440.
4) Spacer for fixing reinforcement made out of stainless steel AISI 304.
5) UNI 6592 support washer made out of stainless steel AISI 304.
6) Greaser for relubrication made out of nickel-plated brass.

NOTE: The only difference from UCFB/C series is lack of protection cover, which can be ordered separately as an accessory.

Maximum shaft alignment error 2,5°
For further information please contact our technical office or sales department.

Side flanged bearing supports

Technical data

Serie **UCFB/CX**

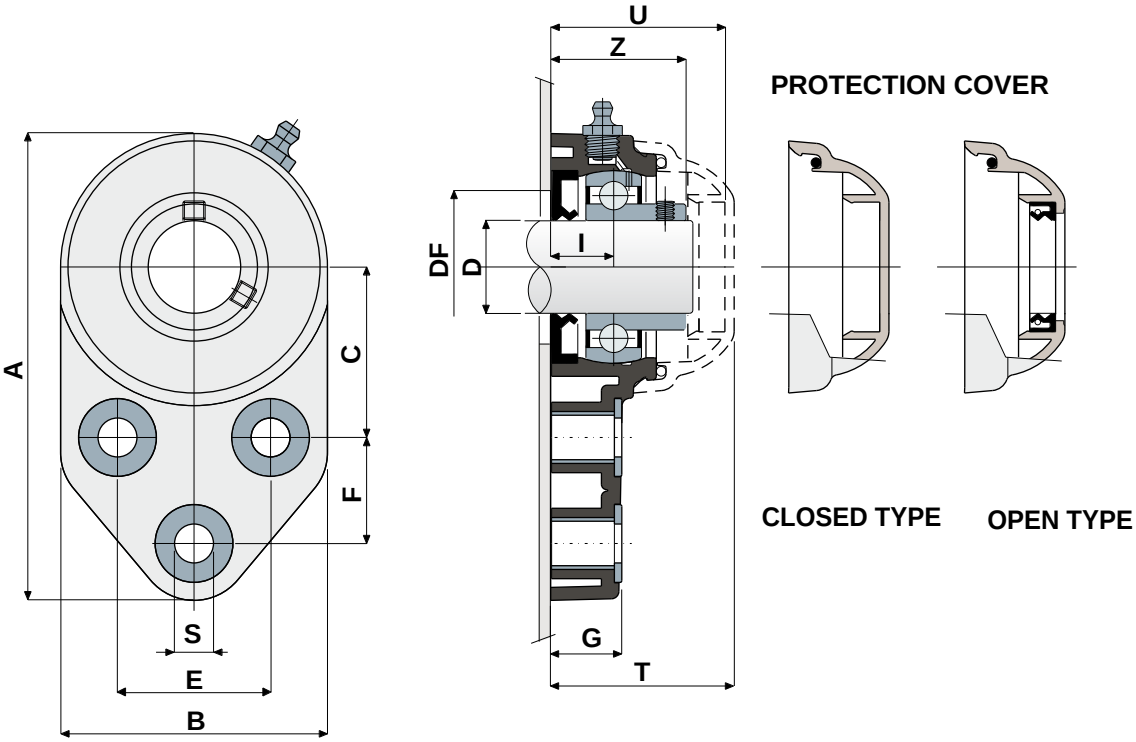

CHROME STEEL BEARING																						
D	SERIE	Support CODES		DIMENSIONS (mm)											DF		Bearing load (N)		Bearing support load	COVER CODES	
		Black colour	White colour	E	A	B	C	F	S	G	I	Z	U	T	Max	Min	C	C0	(N)	Closed type	Open type
20	UCFB 204 CX	**83023**	**84738**	41,3	126	72	46	28,6	10,5	19	18	36	47	49,5	45	40	12800	6600	8500	**80254**	**80255**
25	UCFB 205 CX	**82772**	**84739**	41,3	126	72	46	28,6	10,5	19	17	36,5	47	49,5	50	45	14000	7800	9000	**80075**	**80076**
30	UCFB 206 CX	**84056**	**84740**	47,6	142	85	52,4	32	10,5	26,3	20,7	41,7	53,2	55,7	60	50	19500	11200	11000	**80011**	**80053**
35	UCFB 207 CX	**84057**	**84741**	51	155	94	60,5	32	10,5	26,3	20	45,3	56,5	59	70	55	25500	15300	13000	**80077**	**80078**
40	UCFB 208 CX	**82478**	**84742**	50	165	100	60,5	41	10,5	26,3	19,5	48,5	65,5	68	78	65	32500	19000	18000	**80256**	**80257**

STAINLESS STEEL BEARING AISI 440																						
D	SERIE	Support CODES		DIMENSIONS (mm)											DF		Bearing load (N)		Bearing support load	COVER CODES	
		Black colour	White colour	E	A	B	C	F	S	G	I	Z	U	T	Max	Min	C	C0	(N)	Closed type	Open type
20	UCFB 204 CX	**83039**	**84743**	41,3	126	72	46	28,6	10,5	19	18	36	47	49,5	45	40	10800	6600	8500	**80254**	**80255**
25	UCFB 205 CX	**82776**	**84744**	41,3	126	72	46	28,6	10,5	19	17	36,5	47	49,5	50	45	11900	7800	9000	**80075**	**80076**
30	UCFB 206 CX	**84058**	**84745**	47,6	142	85	52,4	32	10,5	26,3	20,7	41,7	53,2	55,7	60	50	16250	11200	11000	**80011**	**80053**
35	UCFB 207 CX	**84059**	**84746**	51	155	94	60,5	32	10,5	26,3	20	45,3	56,5	59	70	55	21600	15300	13000	**80077**	**80078**
40	UCFB 208 CX	**83041**	**84747**	50	165	100	60,5	41	10,5	26,3	19,5	48,5	65,5	68	78	65	26000	19000	18000	**80256**	**80257**

VERSIONS WITH MEASURES IN INCHES

CHROME STEEL BEARING																							
D		SERIE	Support CODES		DIMENSIONS (mm)												DF		Bearing load (N)		Bearing support load	COVER CODES	
(inches)	(mm)		Black colour	White colour	E	A	B	C	F	S	G	I	Z	U	T	Max	Min	C	C0	(N)	Closed type	Open type
1"	25,4	UCFB 205 CX	**84527**	**84915**	41,3	126	72	46	28,6	10,5	19	17	36,5	47	49,5	50	45	14000	7800	9000	**80075**	**85202**
1"1/4	31,75	UCFB 206 CX	**84528**	**84916**	47,6	142	85	52,4	32	10,5	26,3	20,7	41,7	53,2	55,7	60	50	19500	11300	11000	**80011**	**85203**

MATERIALS: Support made out of black or white PA + glass fiber; chrome steel or stainless steel bearing; greaser made out of nickel plated brass; reinforcement bushings and washers made out of stainless steel AISI 304; gaskets made out of NBR rubber; cover made out of polypropylene, grey colour RAL 7042.
FEATURES: The difference from UCFB/C series is lack of protection cover which can be ordered separately as an accessory. Assembly with not shouldered shafts. Maximum shaft alignment error 2.5°.
BOX QUANTITY: 8 pieces.
ON REQUEST: Versions with body in polypropylene + glass fiber and antibacterial additive; protection cover in different colours and with customized brand; box quantity according to your request; Viton gaskets, "Long life" bearings.

Side flanged bearing supports

Serie **UCFB**

Without cover and back gasket

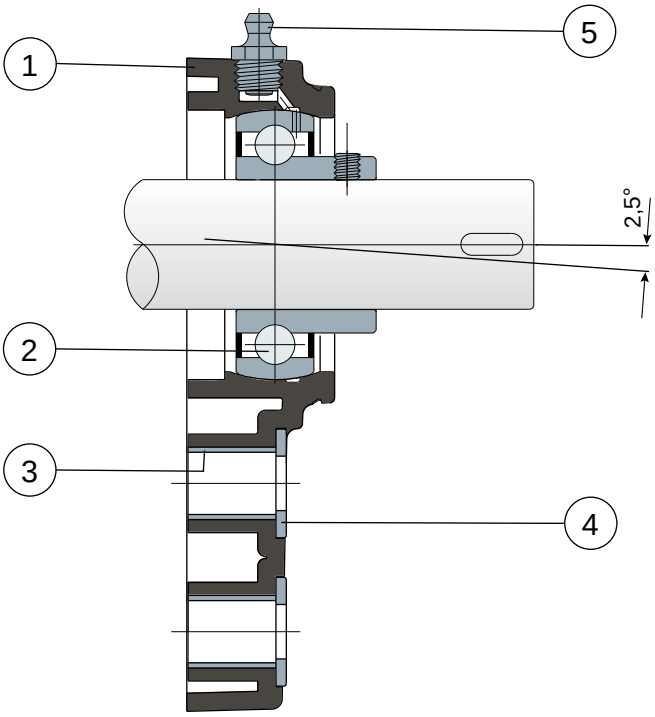

1) Support body made out of black or white polyamide reinforced with glass fibers.
2) Chrome steel or stainless steel bearing AISI 440.
3) Spacer for fixing reinforcement made out of stainless steel AISI 304.
4) UNI 6592 support washer made out of stainless steel AISI 304.
5) Greaser for relubrication made out of nickel-plated brass.

NOTE: The only difference from UCFB/C series is lack of back gasket and protection cover, which can be ordered separately as accessories.

Support dimensions respect ISO 3228 set of rules.
Maximum shaft alignment error 2,5°
For further information please contact our technical office or sales department.

Side flanged bearing supports

Technical data

Serie **UCFB**

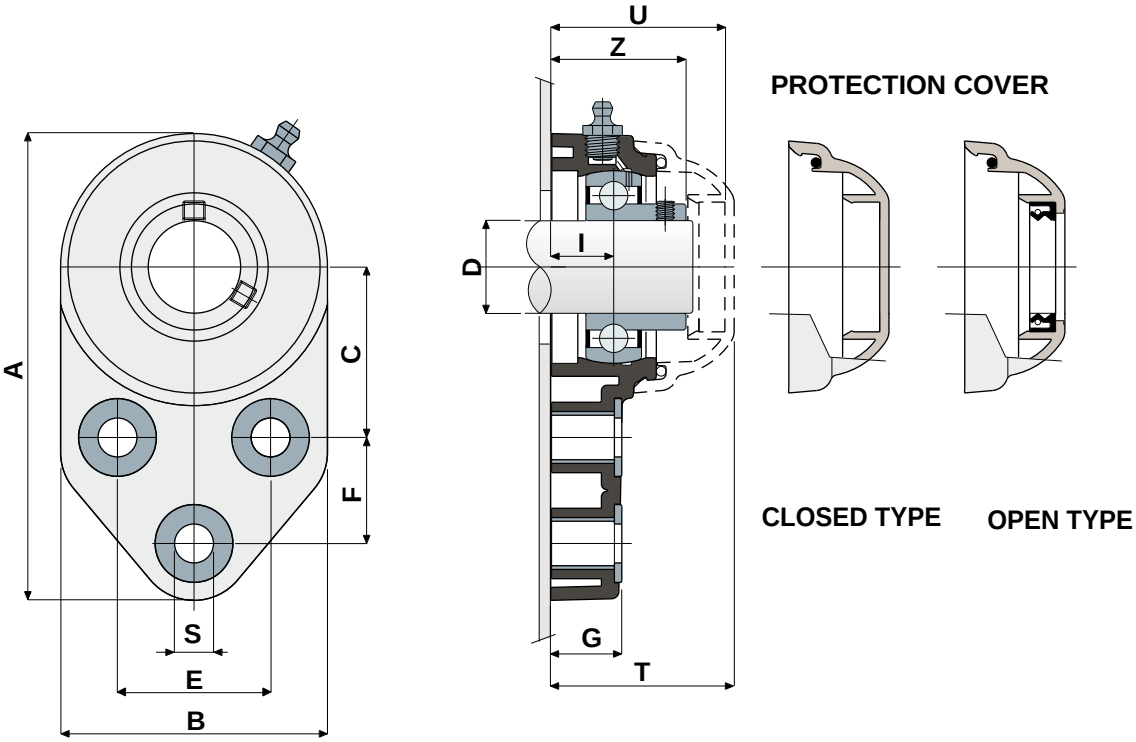

CHROME STEEL BEARING																				
D	SERIE	Support CODES		DIMENSIONS (mm)											Bearing load (N)		Bearing support load	COVER CODES	
		Black colour	White colour	E	A	B	C	F	S	G	I	Z	U	T	C	C0	(N)	Closed type	Open type
20	UCFB 204	83025	84748	41,3	126	72	46	28,6	10,5	19	18	36	47	49,5	12800	6600	8500	80254	80255
25	UCFB 205	82773	84749	41,3	126	72	46	28,6	10,5	19	17	36,5	47	49,5	14000	7800	9000	80075	80076
30	UCFB 206	84060	84750	47,6	142	85	52,4	32	10,5	26,3	20,7	41,7	53,2	55,7	19500	11200	11000	80011	80053
35	UCFB 207	84061	84751	51	155	94	60,5	32	10,5	26,3	20	45,3	56,5	59	25500	15300	13000	80077	80078
40	UCFB 208	83029	84752	50	165	100	60,5	41	10,5	26,3	19,5	48,5	65,5	68	32500	19000	18000	80256	80257

STAINLESS STEEL BEARING AISI 440																				
D	SERIE	Support CODES		DIMENSIONS (mm)											Bearing load (N)		Bearing support load	COVER CODES	
		Black colour	White colour	E	A	B	C	F	S	G	I	Z	U	T	C	C0	(N)	Closed type	Open type
20	UCFB 204	83042	84753	41,3	126	72	46	28,6	10,5	19	18	36	47	49,5	10800	6600	8500	80254	80255
25	UCFB 205	82777	84754	41,3	126	72	46	28,6	10,5	19	17	36,5	47	49,5	11900	7800	9000	80075	80076
30	UCFB 206	84062	84755	47,6	142	85	52,4	32	10,5	26,3	20,7	41,7	53,2	55,7	16250	11200	11000	80011	80053
35	UCFB 207	84063	84756	51	155	94	60,5	32	10,5	26,3	20	45,3	56,5	59	21600	15300	13000	80077	80078
40	UCFB 208	83044	84757	50	165	100	60,5	41	10,5	26,3	19,5	48,5	65,5	68	26000	19000	18000	80256	80257

VERSIONS WITH MEASURES IN INCHES

CHROME STEEL BEARING																					
D		SERIE	Support CODES		DIMENSIONS (mm)											Bearing load (N)		Bearing support load	COVER CODES	
(inches)	(mm)		Black colour	White colour	E	A	B	C	F	S	G	I	Z	U	T	C	C0	(N)	Closed type	Open type
1"	25,4	UCFB 205	84529	84919	41,3	126	72	46	28,6	10,5	19	17	36,5	47	49,5	9000	7800	9000	80075	85202
1"1/4	31,75	UCFB 206	84530	84920	47,6	142	85	52,4	32	10,5	26,3	20,7	41,7	53,2	55,7	11000	11300	11000	80011	85203

MATERIALS: Support made out of black or white colour PA + glass fiber; chrome steel or stainless steel bearing; greaser made out of nickel plated brass; reinforcement bushings and washers made out of stainless steel AISI 304; gaskets made out of NBR rubber; cover made out of polypropylene, grey colour RAL 7042.
FEATURES: The difference from UCFB/C series is lack of back gasket and protection cover, which can be ordered separately as accessories. Assembly with shouldered and not shouldered shafts. Maximum shaft alignment error 2.5°.
BOX QUANTITY: 8 pieces.
ON REQUEST: Versions with body in polypropylene + glass fiber and antibacterial additive; protection cover in different colours and with customized brand; box quantity according to your request; Viton gaskets, "Long life" bearings.

Pillow Blocks

Serie **UCP/C**

Full protection of bearing

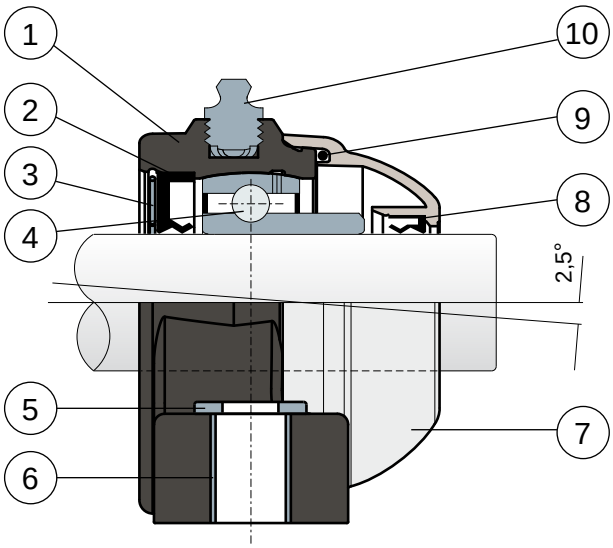

1) Support body made out of black or white polyamide reinforced with glass fibers.
2) Back gasket made out of NBR rubber for turning shaft seal.
3) Safety ring in stainless steel AISI 304.
4) Chrome steel or stainless steel bearing AISI 440.
5) UNI 6592 support washer made out of stainless steel AISI 304.
6) Spacer for fixing reinforcement made out of stainless steel AISI 304.
7) Protection cover made out of polypropylene (grey colour Ral 7042).
8) Front gasket made out of NBR rubber for turning shaft seal.
9) OR gasket made out of NBR rubber.
10) Greaser for relubrication made out of nickel-plated brass.

Support dimensions respect ISO 3228 set of rules.
Maximum shaft alignment error 2,5°.
For further information please contact our technical office or sales department.

Pillow Blocks

Technical data

Serie **UCP/C**

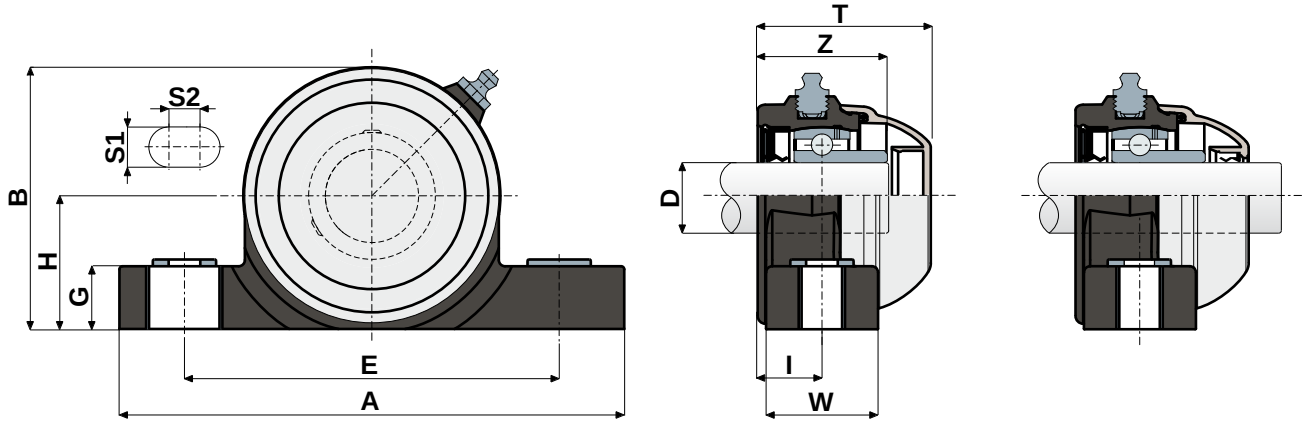

CLOSED TYPE OPEN TYPE

CHROME STEEL BEARING																				
D	SERIE	CODES				DIMENSIONS (mm)											Bearing load (N)		Bearing support load	
		Black colour		White colour																
		Closed type	Open type	Closed type	Open type	E	A	S1	S2	G	H	B	I	W	Z	T	C	C0	(N)	
20	UCP 204 C	84076	84077	84758	84759	96	130	13	10	20	33,5	65,5	18	30	36	49	12800	6600	5750	
25	UCP 205 C	83682	83683	84760	84761	106	140	13	10	20	36,5	71,5	19,6	35	39	51,7	14000	7800	6900	
30	UCP 206 C	83684	83685	84762	84763	121	163	13	10	20	43	84,5	20,7	36	41,7	55,7	19500	11200	9200	
35	UCP 207 C	83686	83687	84764	84765	126	168	13	10	20	47,6	93,3	22,7	39	48	61,8	25500	15300	11500	
40	UCP 208 C	85441	85443	85445	85446	136	185	13	10	20	50	100	22,5	38,6	51,5	70,7	30700	19000	11500	NEW

STAINLESS STEEL BEARING AISI 440																				
D	SERIE	CODES				DIMENSIONS (mm)											Bearing load (N)		Bearing support load	
		Black colour		White colour																
		Closed type	Open type	Closed type	Open type	E	A	S1	S2	G	H	B	I	W	Z	T	C	C0	(N)	
20	UCP 204 C	84078	84079	84766	84767	96	130	13	10	20	33,5	65,5	18	30	36	49	10800	6600	5750	
25	UCP 205 C	83696	83697	84768	84769	106	140	13	10	20	36,5	71,5	19,6	35	39	51,7	11900	7800	6900	
30	UCP 206 C	83698	83699	84770	84771	121	163	13	10	20	43	84,5	20,7	36	41,7	55,7	16250	11200	9200	
35	UCP 207 C	83700	83701	84772	84773	126	168	13	10	20	47,6	93,3	22,7	39	48	61,8	21600	15300	11500	
40	UCP 208 C	85447	85448	85449	85450	136	185	13	10	20	50	100	22,5	38,6	51,5	70,7	26000	19000	11500	NEW

VERSIONS WITH MEASURES IN INCHES

CHROME STEEL BEARING																				
D		SERIE	CODES				DIMENSIONS (mm)											Bearing load (N)		Bearing support load
			Black colour		White colour															
(inches)	(mm)		Closed type	Open type	Closed type	Open type	E	A	S1	S2	G	H	B	I	W	Z	T	C	C0	(N)
1"	25,4	UCP 205 C	84531	84532	84923	84924	106	140	13	10	20	36,5	71,5	19,6	35	39	51,7	14000	7800	6900
1"1/4	31,75	UCP 206 C	84533	84534	84925	84926	121	163	13	10	20	43	84,5	20,7	36	41,7	55,7	19500	11300	9200

MATERIALS: Support made out of black or white colour PA+glass fiber; chrome steel or stainless steel bearing; greaser made out of nickel plated brass; reinforcement bushings, washers and safety ring made out of stainless steel AISI 304; gaskets made out of NBR rubber; cover made out of polypropylene, grey colour RAL 7042.
FEATURES: Full protection of bearing against external agents. Assembly with shouldered and not shouldered shafts. Maximum shaft alignment error 2,5°.
BOX QUANTITY: 8 pieces.
ON REQUEST: Versions with body in polypropylene + glass fiber and antibacterial additive; protection cover in different colours and with customized brand; box quantity according to your request; Viton gaskets, "Long life" bearings.

Pillow Blocks

Serie **UCP/CX**

Without protection cover

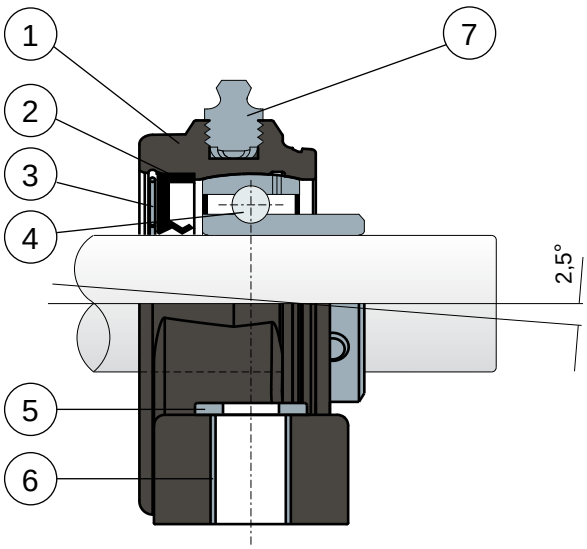

1) Support body made out of black or white polyamide reinforced with glass fibers.
2) Back gasket made out of NBR rubber for turning shaft seal.
3) Safety ring in stainless steel AISI 304.
4) Chrome steel or stainless steel bearing AISI 440.
5) UNI 6592 support washer made out of stainless steel AISI 304.
6) Spacer for fixing reinforcement made out of stainless steel AISI 304.
7) Greaser for relubrication made out of nickel-plated brass.

Support dimensions respect ISO 3228 set of rules.
Maximum shaft alignment error 2,5°.
For further information please contact our technical office or sales department.

Pillow Blocks

Technical data

Serie **UCP/CX**

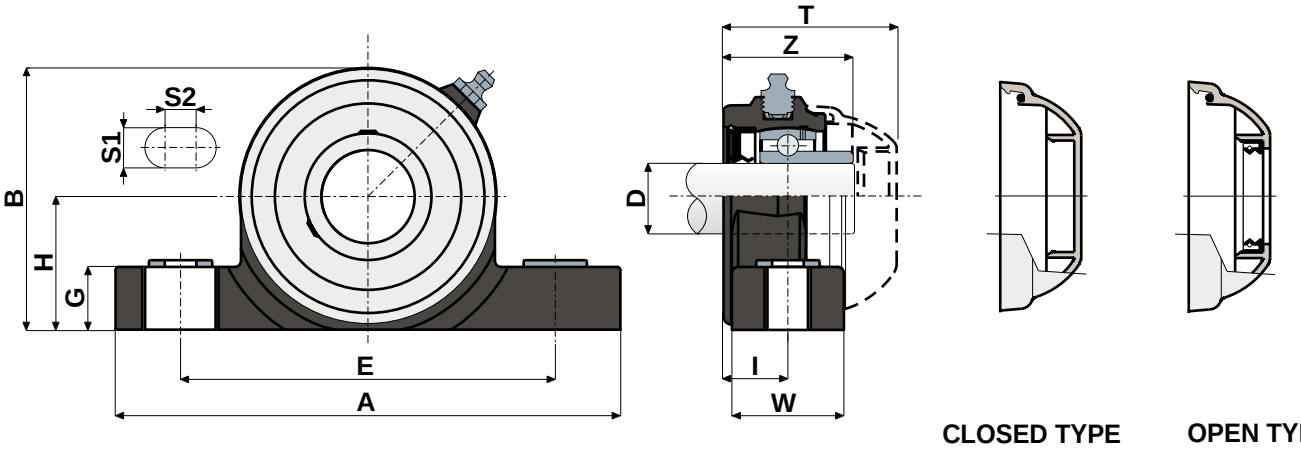

CHROME STEEL BEARING																				
		Support CODES		DIMENSIONS (mm)											Bearing load (N)		Bearing support load	COVER CODES	
D	SERIE	Black colour	White colour	E	A	S1	S2	G	H	B	I	W	Z	T	C	C0	(N)	Closed type	Open type
20	UCP 204 CX	**84080**	**84774**	96	130	13	10	20	33,5	65,5	18	30	36	49	12800	6600	5750	**80254**	**80255**
25	UCP 205 CX	**83688**	**84775**	106	140	13	10	20	36,5	71,5	19,6	35	39	51,7	14000	7800	6900	**80075**	**80076**
30	UCP 206 CX	**83689**	**84776**	121	163	13	10	20	43	84,5	20,7	36	41,7	55,7	19500	11200	9200	**80011**	**80053**
35	UCP 207 CX	**83690**	**84777**	126	168	13	10	20	47,6	93,3	22,7	39	48	61,8	25500	15300	11500	**80077**	**80078**
40	UCP 208 CX	**85451**	**85452**	136	185	13	10	20	50	100	22,5	38,6	51,5	70,7	30700	19000	11500	**80256**	**80257** NEW

STAINLESS STEEL BEARING AISI 440																				
		Support CODES		DIMENSIONS (mm)											Bearing load (N)		Bearing support load	COVER CODES	
D	SERIE	Black colour	White colour	E	A	S1	S2	G	H	B	I	W	Z	T	C	C0	(N)	Closed type	Open type
20	UCP 204 CX	**84081**	**84778**	96	130	13	10	20	33,5	65,5	18	30	36	49	10800	6550	5750	**80254**	**80255**
25	UCP 205 CX	**83702**	**84779**	106	140	13	10	20	36,5	71,5	19,6	35	39	51,7	11900	7800	6900	**80075**	**80076**
30	UCP 206 CX	**83703**	**84780**	121	163	13	10	20	43	84,5	20,7	36	41,7	55,7	16250	11200	9200	**80011**	**80053**
35	UCP 207 CX	**83704**	**84781**	126	168	13	10	20	47,6	93,3	22,7	39	48	61,8	21600	15300	11500	**80077**	**80078**
40	UCP 208 CX	**85453**	**85454**	136	185	13	10	20	50	100	22,5	38,6	51,5	70,7	30700	19000	11500	**80256**	**80257** NEW

VERSIONS WITH MEASURES IN INCHES

CHROME STEEL BEARING																					
D		SERIE	Support CODES		DIMENSIONS (mm)											Bearing load (N)		Bearing support load	COVER CODES	
(inches)	(mm)		Black colour	White colour	E	A	S1	S2	G	H	B	I	W	Z	T	C	C0	(N)	Closed type	Open type
1"	25,4	UCP 205 CX	**84535**	**84931**	106	140	13	10	20	36,5	71,5	19,6	35	39	51,7	14000	7800	6900	**80075**	**85202**
1"1/4	31,75	UCP 206 CX	**84536**	**84932**	121	163	13	10	20	43	84,5	20,7	36	41,7	55,7	19500	11300	9200	**80011**	**85203**

MATERIALS: Support made out of black or white colour PA+glass fiber; chrome steel or stainless steel bearing; greaser made out of nickel plated brass; reinforcement bushings, washers and safety ring made out of stainless steel AISI 304; gaskets made out of NBR rubber; cover made out of polypropylene, grey colour RAL 7042.
FEATURES: The difference from UCP/C series is lack of protection cover which can be ordered separately as an accessory. Assembly with shouldered and not shouldered shafts. Maximum shaft alignment error 2,5°.
BOX QUANTITY: 8 pieces.
ON REQUEST: Versions with body in polypropylene + glass fiber and antibacterial additive; protection cover in different colours and with customized brand; box quantity according to your request; Viton gaskets, "Long life" bearings.

Pillow Blocks

Serie **UCP**

Without cover and back gasket

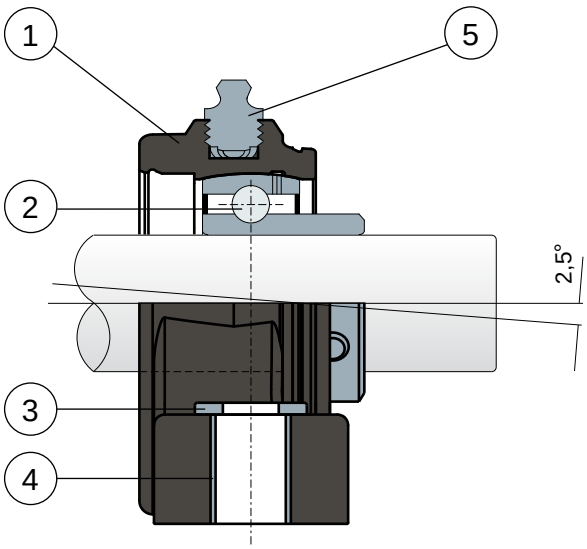

1) Support body made out of black or white polyamide reinforced with glass fibers.
2) Chrome steel or stainless steel bearing AISI 440.
3) UNI 6592 support washer made out of stainless steel AISI 304.
4) Spacer for fixing reinforcement made out of stainless steel AISI 304.
5) Greaser for relubrication made out of nickel-plated brass.

Support dimensions respect ISO 3228 set of rules.
Maximum shaft alignment error 2,5°.
For further information please contact our technical office or sales department.

Pillow Blocks

Technical data

Serie **UCP**

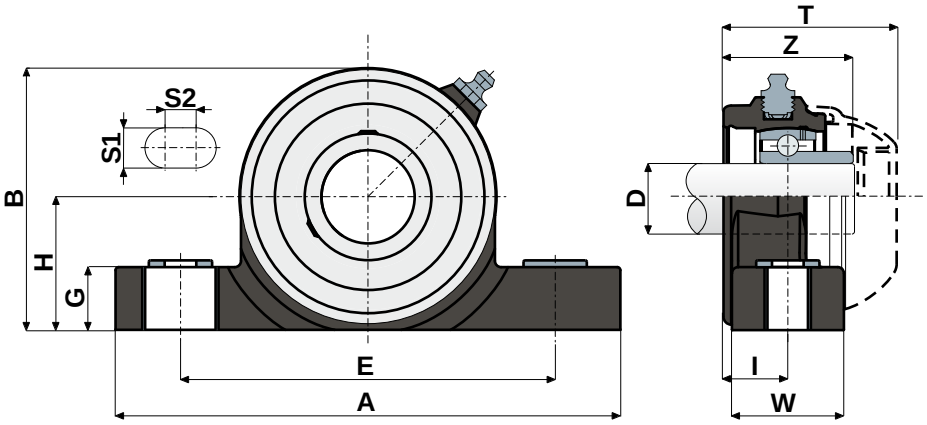

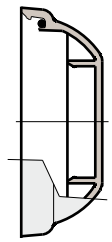

CLOSED TYPE

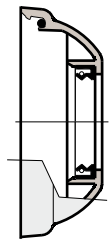

OPEN TYPE

CHROME STEEL BEARING																				
		Support CODES		DIMENSIONS (mm)											Bearing load (N)		Bearing support load	COVER CODES		
D	SERIE	Black colour	White colour	E	A	S1	S2	G	H	B	I	W	Z	T	C	C0	(N)	Closed type	Open type	
20	UCP 204	**84082**	**84782**	96	130	13	10	20	33,5	65,5	18	30	36	49	12800	6600	5750	**80254**	**80255**	
25	UCP 205	**83691**	**84783**	106	140	13	10	20	36,5	71,5	19,6	35	39	51,7	14000	7800	6900	**80075**	**80076**	
30	UCP 206	**83692**	**84784**	121	163	13	10	20	43	84,5	20,7	36	41,7	55,7	19500	11200	9200	**80011**	**80053**	
35	UCP 207	**83693**	**84785**	126	168	13	10	20	47,6	93,3	22,7	39	48	61,8	25500	15300	11500	**80077**	**80078**	
40	UCP 208	**85455**	**85456**	136	185	13	10	20	50	100	22,5	38,6	51,5	70,7	30700	19000	11500	**80256**	**80257**	NEW

STAINLESS STEEL BEARING AISI 440																				
		Support CODES		DIMENSIONS (mm)											Bearing load (N)		Bearing support load	COVER CODES		
D	SERIE	Black colour	White colour	E	A	S1	S2	G	H	B	I	W	Z	T	C	C0	(N)	Closed type	Open type	
20	UCP 204	**84083**	**84786**	96	130	13	10	20	33,5	65,5	18	30	36	49	8300	6600	5750	**80254**	**80255**	
25	UCP 205	**83705**	**84787**	106	140	13	10	20	36,5	71,5	19,6	35	39	51,7	9150	7800	6900	**80075**	**80076**	
30	UCP 206	**83706**	**84788**	121	163	13	10	20	43	84,5	20,7	36	41,7	55,7	12500	11200	9200	**80011**	**80053**	
35	UCP 207	**83707**	**84789**	126	168	13	10	20	47,6	93,3	22,7	39	48	61,8	16600	15300	11500	**80077**	**80078**	
40	UCP 208	**85457**	**85458**	136	185	13	10	20	50	100	22,5	38,6	51,5	70,7	30700	19000	11500	**80256**	**80257**	NEW

VERSIONS WITH MEASURES IN INCHES

CHROME STEEL BEARING																					
D		SERIE	Support CODES		DIMENSIONS (mm)											Bearing load (N)		Bearing support load	COVER CODES	
(inches)	(mm)		Black colour	White colour	E	A	S1	S2	G	H	B	I	W	Z	T	C	C0	(N)	Closed type	Open type
1"	25,4	UCP 205	**84537**	**84936**	106	140	13	10	20	36,5	71,5	19,6	35	39	51,7	14000	7800	6900	**80075**	**85202**
1"1/4	31,75	UCP 206	**84538**	**84937**	121	163	13	10	20	43	84,5	20,7	36	41,7	55,7	19500	11300	9200	**80011**	**85203**

MATERIALS: Support made out of black or white colour PA+glass fiber; chrome steel or stainless steel bearing; greaser made out of nickel plated brass; reinforcement bushings and washers made out of stainless steel AISI 304; cover made out of polypropylene, grey colour RAL 7042.
FEATURES: The difference from UCP/C series is lack of back gasket and protection covers, which can be ordered separately as accessories. Assembly with shouldered and not shouldered shafts. Maximum shaft alignment error 2,5°.
BOX QUANTITY: 8 pieces.
ON REQUEST: Versions with body in polypropylene + glass fiber and antibacterial additive; protection cover in different colours and with customized brand; box quantity according to your request; Viton gaskets, "Long life" bearings.

Supporting and levelling components

Part.	Pag.
1	183
2	184
3	183
4	184
10	188
15	189
18 pa	185
18	190
25 pa	186
25	192
27 pa	185
27	191
38 pa	186
38	193
45	194
64 mm	222
64 inches	224
68 mm	225
68 inches	227
79	196
81	201
82	221
87	197
89	198
92	195

Part.	Pag.
93	199
94	204
95	205
96	202
97	206
98	203
99	207
101	211
103	217
104	200
107	210
108	216
109	214
110	220
111	213
112	219
113	209
114	215
115	208
116	228
117	228
118	187
119	218
120	212

Fixed feet

wrench 25

Part. 1 pag. 183

Ø 40

Part. 3 pag. 183

Ø 25

Part. 2 pag. 184

Ø 40

Part. 4 pag. 184

PA articulated feet

Ø 60

Part. 18 pa pag. 185

60x95

Part. 27 pa pag. 185

Ø 80

Part. 25 pa pag. 186

Ø 102

Part. 38 pa pag. 186

Articulated feet

Ø 30

Part. 118 pag. 187

Ø 40

Part. 10 pag. 188

Ø 50

Part. 15 pag. 189

Ø 60

Part. 18 pag. 190

60x95

Part. 27 pag. 191

Ø 80

Part. 25 pag. 192

Ø 102

Part. 38 pag. 193

Ø 124

Part. 45 pag. 194

Ø 124

Part. 92 pag. 195

Adjustable feet

Ø 50
Part. 79 pag. 196

Ø 102
Part. 87 pag. 197

Ø 124
Part. 89 pag. 198

Ø 124
Part. 93 pag. 199

Ø 80
Part. 81 pag. 201

Ø 113
Part. 96 pag. 202

Ø 113
Part. 98 pag. 203

Ø 180
Part. 94 pag. 204

Ø 80
Part. 95 pag. 205

Ø 102
Part. 97 pag. 206

Ø 124
Part. 99 pag. 207

Spacers

Part. 104 pag. 200

Articulated feet, sanitizable

Ø 55
Part. 113 pag. 209

Ø 75
Part. 107 pag. 210

Ø 95
Part. 101 pag. 211

65x96
Part. 120 pag. 212

95x130
Part. 111 pag. 213

Ø 120
Part. 109 pag. 214

Adjustable feet, sanitizable

Ø 78 Part. **115** pag. 208	**Ø 55** Part. **114** pag. 215	**Ø 55** Part. **114** pag. 215	**Ø 75** Part. **108** pag. 216
Ø 75 Part. **108** pag. 216	**Ø 95** Part. **103** pag. 217	**Ø 95** Part. **103** pag. 217	**65x96** Part. **119** pag. 218
65x96 Part. **119** pag. 218	**95x130** Part. **112** pag. 219	**95x130** Part. **112** pag. 219	**Ø 120** Part. **110** pag. 220
Ø 120 Part. **110** pag. 220			

Bushings

Part. **82** pag. 221	**sizes in mm** Part. **64** pag. 222	**sizes in inches** Part. **64** pag. 224	**sizes in mm** Part. **68** pag. 225
sizes in inches Part. **68** pag. 227	Part. **116** pag. 228	Part. **117** pag. 228	

Fixed feet

(comoulded)

wrench 25 Part. 1

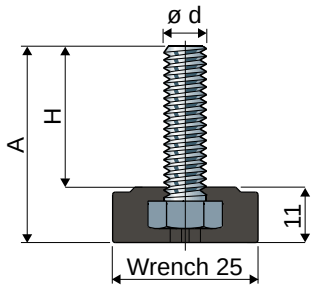

Spindle measures in mm				
ød	A	H	Spindle in zinc plated steel Code	Max static load (N)
M8	38	27	**1 / 82880**	6000

Base material: Reinforced polyamide black colour.
Box quantity: 24 pieces.

Washers UNI 6592-69 - **Box quantity:** 24 pieces.

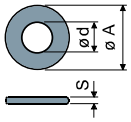

ø M	M8
Smm	1,6
ø A mm	17
Zinc plated steel codes	7636

Nuts UNI 5588-65 - **Box quantity:** 24 pieces.

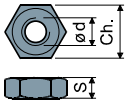

ø d	M8
Smm	6,5
Ch. mm	13
Zinc plated steel codes	7634

On request
- **Bases:** In reinforced polypropylene • other colours.
- **Rod:** In stainless steel AISI 304.
- **Box quantity:** Not standard.

ø 40 Part. 3

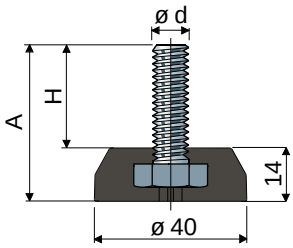

Spindle measures in mm				
ød	A	H	Spindle in zinc plated steel Code	Max static load (N)
M10	40	26	**3 / 82886**	7000

Base material: Reinforced polyamide black colour.
Box quantity: 24 pieces.

Washers UNI 6592-69 - **Box quantity:** 24 pieces.

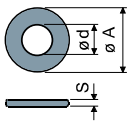

ø M	M10
Smm	2
ø A mm	21
Zinc plated steel codes	7283

Nuts UNI 5588-65 - **Box quantity:** 24 pieces.

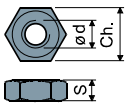

ø d	M10
Smm	8
Ch. mm	17
Zinc plated steel codes	7269

On request
- **Bases:** In reinforced polypropylene • other colours.
- **Rod:** In stainless steel AISI 304.
- **Box quantity:** Not standard.

Fixed feet

(base in reinforced polyamide)

Part. 2 ø 25

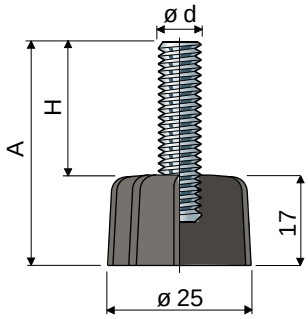

Spindle measures in mm			Spindle material		
ød	A	H	Zinc plated steel Code	Stainless steel AISI 304 Code	Max static load (N)
M8	40	23	**2 / 7702**	**2 / 7703**	4000
	50	33	**2 / 7706**	**2 / 7707**	
M10	40	23	**2 / 7712**	**2 / 7713**	5000
	50	33	**2 / 7716**	**2 / 7717**	
M12	75	58	**2 / 80156**	**2 / 80157**	6000

Base material: Reinforced polyamide black colour.
Box quantity: 24 pieces.

Washers UNI 6592-69 - **Box quantity:** 24 pieces.

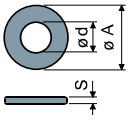

ø M	M8	M10	M12
S mm	1,6	2	2,5
ø A mm	17	21	24
Zinc plated steel codes	7636	7283	7284
Stainless steel codes	7637	7286	7287

Nuts UNI 5588-65 - **Box quantity:** 24 pieces.

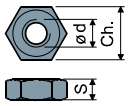

ø d	M8	M10	M12
S mm	6,5	8	10
Ch. mm	13	17	19
Zinc plated steel codes	7634	7269	7270
Stainless steel codes	7635	7272	7273

On request
- **Bases:** In reinforced polypropylene • other colours.
- **Box quantity:** Not standard.
- **Assembling of:** Nuts • washers.

Part. 4 ø 40

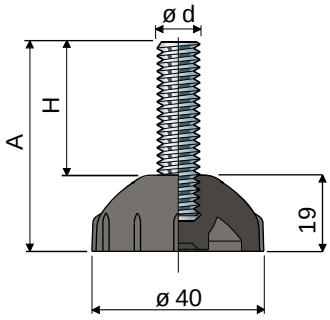

Spindle measures in mm			Spindle material		
ød	A	H	Zinc plated steel Code	Stainless steel AISI 304 Code	Max static load (N)
M8	40	21	**4 / 7722**	**4 / 7723**	4000
	50	31	**4 / 7726**	**4 / 7727**	
M10	40	21	**4 / 7732**	**4 / 7733**	5000
	50	31	**4 / 7736**	**4 / 7737**	
M12	75	56	**4 / 80158**	**4 / 80159**	6000

Base material: Reinforced polyamide black colour.
Box quantity: 24 pieces.

Accessories
Anti-slip pads:
- **code:** 7263;
- **material:** thermoplastic rubber 68 Shore black colour;
- **box quantity:** 24 pieces.

Washers UNI 6592-69 - **Box quantity:** 24 pieces.

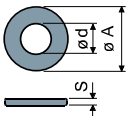

ø M	M8	M10	M12
S mm	1,6	2	2,5
ø A mm	17	21	24
Zinc plated steel codes	7636	7283	7284
Stainless steel codes	7637	7286	7287

Nuts UNI 5588-65 - **Box quantity:** 24 pieces.

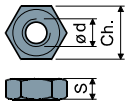

ø d	M8	M10	M12
S mm	6,5	8	10
Ch. mm	13	17	19
Zinc plated steel codes	7634	7269	7270
Stainless steel codes	7635	7272	7273

On request
- **Bases:** In reinforced polypropylene • other colours.
- **Box quantity:** Not standard.
- **Assembling of:** Anti-slip pads • nuts • washers.

PA articulated feet

(in reinforced polyamide)

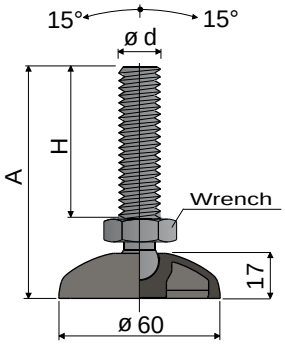

ø 60 Part. 18

Spindle measures in mm					
ød	A	H	Wrench	Spindle and base in reinforced polyamide Code	Max static load (N)
M16	101	67	24	**18 / 7627**	7000
M20	174	140	24	**18 / 80160**	7500

Material base and spindle: Reinforced polyamide black colour.
Box quantity: 24 pieces.

Accessories
Anti-slip pads:
- **code:** 7265;
- **material:** thermoplastic rubber 68 Shore black colour;
- **box quantity:** 24 pieces.

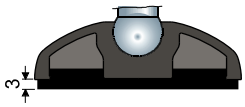

Washers UNI 6592-69 - **Box quantity:** 24 pieces.

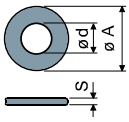

øM	M16	M20
Smm	3	3
øAmm	30	37
Zinc plated steel codes	7289	7290
Stainless steel codes	7291	7292

Nuts UNI 5588-65 - **Box quantity:** 24 pieces.

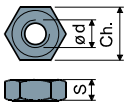

ød	M16	M20
Smm	13	16
Ch. mm	24	30
Zinc plated steel codes	7275	7276
Stainless steel codes	7277	7278

On request
- **Bases:** In reinforced polypropylene • other colours.
- **Box quantity:** Not standard.
- **Assembling of:** Anti-slip pads • nuts • washers.

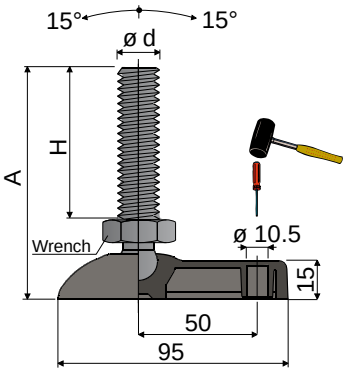

60X95 Part. 27

Spindle measures in mm					
ød	A	H	Wrench	Spindle and base in reinforced polyamide Code	Max static load (N)
M16	101	67	24	**27 / 7628**	7000
M20	174	140	24	**27 / 80161**	7500

Material base and spindle: Reinforced polyamide black colour.
Box quantity: 24 pieces.

Accessories
Anti-slip pads:
- **code:** 7632;
- **material:** thermoplastic rubber 68 Shore black colour;
- **box quantity:** 24 pieces.

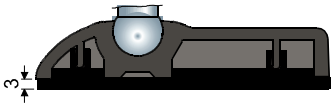

Washers UNI 6592-69 - **Box quantity:** 24 pieces.

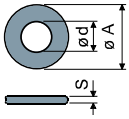

øM	M16	M20
Smm	3	3
øAmm	30	37
Zinc plated steel codes	7289	7290
Stainless steel codes	7291	7292

Nuts UNI 5588-65 - **Box quantity:** 24 pieces.

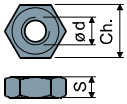

ød	M16	M20
Smm	13	16
Ch. mm	24	30
Zinc plated steel codes	7275	7276
Stainless steel codes	7277	7278

On request
- **Bases:** In reinforced polypropylene • other colours • with prebored fixing holes.
- **Box quantity:** Not standard.
- **Assembling of:** Anti-slip pads • nuts • washers.

PA articulated feet

(in reinforced polyamide)

Part. 25 ø 80

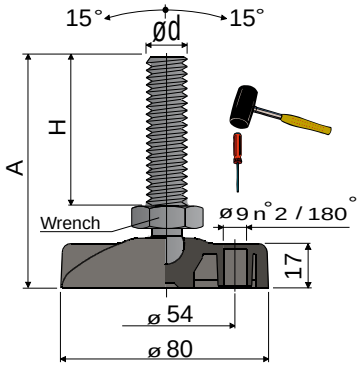

	Spindle measures in mm				
ød	A	H	Wrench	Spindle and base in reinforced polyamide Code	Max static load (N)
M16	104	67	24	**25 / 7629**	7000
M20	177	140	24	**25 / 80162**	7500

Material base and spindle: Reinforced polyamide black colour.
Box quantity: 24 pieces.

Accessories
Anti-slip pads:
- **code:** 7266;
- **material:** thermoplastic rubber 68 Shore black colour;
- **box quantity:** 24 pieces.

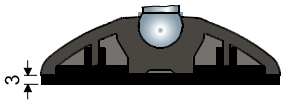

Washers UNI 6592-69 - **Box quantity:** 24 pieces.

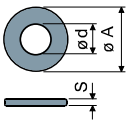

ø M	M16	M20
Smm	3	3
ø A mm	30	37
Zinc plated steel codes	7289	7290
Stainless steel codes	7291	7292

Nuts UNI 5588-65 - **Box quantity:** 24 pieces.

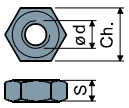

ø d	M16	M20
Smm	13	16
Ch. mm	24	30
Zinc plated steel codes	7275	7276
Stainless steel codes	7277	7278

On request
- **Bases:** In reinforced polypropylene • other colours.
- **Box quantity:** Not standard.
- **Assembling of:** Anti-slip pads • nuts • washers.

Part. 38 ø 102

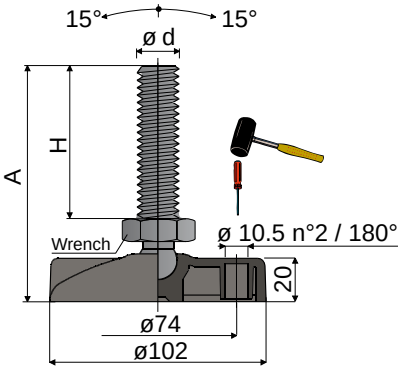

	Spindle measures in mm				
ød	A	H	Wrench	Spindle and base in reinforced polyamide Code	Max static load (N)
M16	107	67	24	**38 / 7630**	7000
M20	180	140	24	**38 / 80155**	7500

Material base and spindle: Reinforced polyamide black colour.
Box quantity: 24 pieces.

Accessories
Anti-slip pads:
- **code:** 7267;
- **material:** thermoplastic rubber 68 Shore black colour;
- **box quantity:** 24 pieces.

Washers UNI 6592-69 - **Box quantity:** 24 pieces.

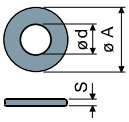

ø M	M16	M20
Smm	3	3
ø A mm	30	37
Zinc plated steel codes	7289	7290
Stainless steel codes	7291	7292

Nuts UNI 5588-65 - **Box quantity:** 24 pieces.

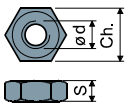

ø d	M16	M20
Smm	13	16
Ch. mm	24	30
Zinc plated steel codes	7275	7276
Stainless steel codes	7277	7278

On request
- **Bases:** In reinforced polypropylene • other colours.
- **Box quantity:** Not standard.
- **Assembling of:** Anti-slip pads • nuts • washers.

Articulated feet

(base in reinforced polyamide)

ø 30 Part. **118**

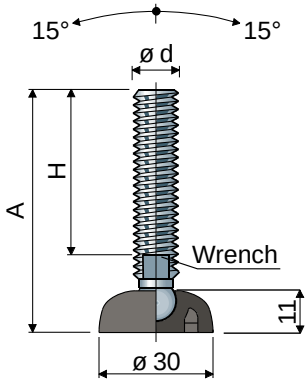

Spindle measures in mm				Spindle material			
ød	A	H	Wrench	Zinc plated steel Code	Stainless steel AISI 304 Code	Stainless steel AISI 316 Code	Max static load (N)
M8	65	45	6	**118 / 84270**	**118 / 84271**	-	9000
	85	65	6	**118 / 84272**	**118 / 84273**	-	
M10	57	35	8	**118 / 84274**	**118 / 84275**	-	10000
	92	70	8	**118 / 84276**	**118 / 84277**	-	
	137	115	8	**118 / 84278**	**118 / 84279**	-	
M12	67	43	10	**118 / 84280**	**118 / 84281**	-	11000
	87	63	10	**118 / 84282**	**118 / 84283**	-	
	102	77	10	**118 / 84284**	**118 / 84285**	-	
	117	93	10	**118 / 84286**	**118 / 84287**	**118 / 85116**	
	147	123	10	**118 / 84288**	**118 / 84289**	-	

Spindle measures in inches				Spindle material		
ød	A	H	Wrench	Zinc plated steel Code	Stainless steel AISI 304 Code	Max static load (N)
1/2"-13 UNC	5,08"	4"	7/16"	**118 / 85170**	**118 / 85140**	11000

Base material: Reinforced polyamide black colour.
Box quantity: 24 pieces.

Accessories
Anti-slip pads:
- **code:** 84290;
- **material:** thermoplastic rubber 68 Shore black colour;
- **box quantity:** 24 pieces.

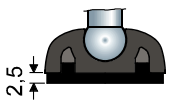

Washers UNI 6592-69 - **Box quantity:** 24 pieces.

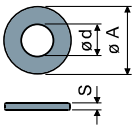

ø M	M8	M10	M12
S mm	1,6	2	2,5
ø A mm	17	21	24
Zinc plated steel codes	7636	7283	7284
Stainless steel codes	7637	7286	7287

Nuts UNI 5588-65 - **Box quantity:** 24 pieces.

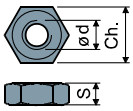

ø d	M8	M10	M12
S mm	6,5	8	10
Ch. mm	13	17	19
Zinc plated steel codes	7634	7269	7270
Stainless steel codes	7635	7272	7273

On request
- **Bases:** In reinforced polypropylene • other colours.
- **Spindles with:** Sunk hexagon head • second wrench seat head • hexagon wrench seat • threads with other pitches and lengths.
- **Box quantity:** Not standard.
- **Assembling of:** Anti-slip pads • nuts • washers.

Articulated feet

(base in reinforced polyamide)

Part. 10 ø 40

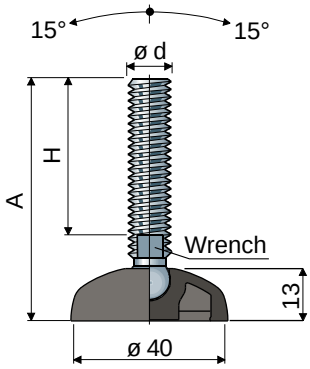

Spindle measures in mm				Spindle material			
ød	A	H	Wrench	Zinc plated steel Code	Stainless steel AISI 304 Code	Stainless steel AISI 316 Code	Max static load (N)
M8	68	45	6	**10 / 7390**	**10 / 7391**	-	10000
	88	65	6	**10 / 7392**	**10 / 7393**	-	
	130	107	6	**10 / 7894**	**10 / 7895**	-	
M10	60	35	8	**10 / 7000**	**10 / 7001**	-	11000
	95	70	8	**10 / 7002**	**10 / 7003**	-	
	140	115	8	**10 / 7004**	**10 / 7005**	-	
M12	70	43	10	**10 / 7006**	**10 / 7007**	-	12000
	90	63	10	**10 / 7008**	**10 / 7009**	-	
	105	77	10	**10 / 7394**	**10 / 7395**	-	
	120	93	10	**10 / 7010**	**10 / 7011**	**10 / 85117**	
	150	123	10	**10 / 7012**	**10 / 7013**	-	
M14	90	61	12	**10 / 7014**	**10 / 7015**	-	13000
	120	91	12	**10 / 7016**	**10 / 7017**	-	
	145	116	12	**10 / 7690**	**10 / 7691**	-	

Spindle measures in inches				Spindle material		
ød	A	H	Wrench	Zinc plated steel Code	Stainless steel AISI 304 Code	Max static load (N)
1/2"-13 UNC	5,08"	4"	7/16"	**10 / 83266**	**10 / 83267**	12000

Base material: Reinforced polyamide black colour.
Box quantity: 24 pieces.

Accessories
Anti-slip pads:
- **code:** 7263;
- **material:** thermoplastic rubber 68 Shore black colour;
- **box quantity:** 24 pieces.

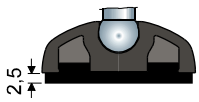

Washers UNI 6592-69 - **Box quantity:** 24 pieces.

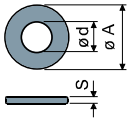

ø M	M8	M10	M12	M14
Smm	1,6	2	2,5	2,5
ø A mm	17	21	24	28
Zinc plated steel codes	7636	7283	7284	7285
Stainless steel codes	7637	7286	7287	7288

Nuts UNI 5588-65 - **Box quantity:** 24 pieces.

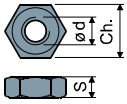

ø d	M8	M10	M12	M14
Smm	6,5	8	10	11
Ch. mm	13	17	19	22
Zinc plated steel codes	7634	7269	7270	7271
Stainless steel codes	7635	7272	7273	7274

On request
- **Bases:** In reinforced polypropylene • other colours.
- **Spindles with:** Sunk hexagon head • second wrench seat head • hexagon wrench seat • threads with other pitches and lengths.
- **Box quantity:** Not standard.
- **Assembling of:** Anti-slip pads • nuts • washers.

Articulated feet

(base in reinforced polyamide)

ø 50 Part. **15**

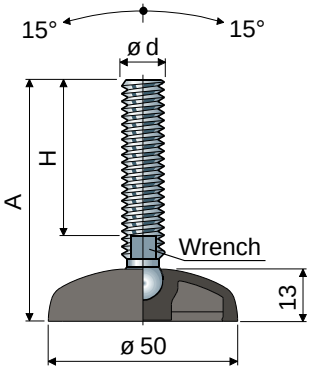

Spindle measures in mm				Spindle material			
ød	A	H	Wrench	Zinc plated steel Code	Stainless steel AISI 304 Code	Stainless steel AISI 316 Code	Max static load (N)
M8	68	45	6	**15 / 7396**	**15 / 7397**	-	11000
	88	65	6	**15 / 7398**	**15 / 7399**	-	
	130	107	6	**15 / 7896**	**15 / 7897**	-	
M10	60	35	8	**15 / 7018**	**15 / 7019**	-	12000
	95	70	8	**15 / 7020**	**15 / 7021**	-	
	140	115	8	**15 / 7022**	**15 / 7023**	-	
M12	70	43	10	**15 / 7024**	**15 / 7025**	-	13000
	90	63	10	**15 / 7026**	**15 / 7027**	-	
	105	77	10	**15 / 7400**	**15 / 7401**	-	
	120	93	10	**15 / 7028**	**15 / 7029**	**15 / 85118**	
	150	123	10	**15 / 7030**	**15 / 7031**	-	
M14	90	61	12	**15 / 7032**	**15 / 7033**	-	14000
	120	91	12	**15 / 7034**	**15 / 7035**	-	
	145	116	12	**15 / 7886**	**15 / 7887**	-	

Spindle measures in inches				Spindle material		
ød	A	H	Wrench	Zinc plated steel Code	Stainless steel AISI 304 Code	Max static load (N)
1/2"-13 UNC	5,1"	4"	7/16"	**15 / 83268**	**15 / 83269**	12000

Base material: Reinforced polyamide black colour.
Box quantity: 24 pieces.

Accessories
Anti-slip pads:
- **code:** 7264;
- **material:** thermoplastic rubber 68 Shore black colour;
- **box quantity:** 24 pieces.

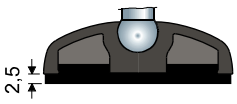

Washers UNI 6592-69 - **Box quantity:** 24 pieces.

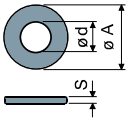

ø M	M8	M10	M12	M14
S mm	1,6	2	2,5	2,5
ø A mm	17	21	24	28
Zinc plated steel codes	7636	7283	7284	7285
Stainless steel codes	7637	7286	7287	7288

Nuts UNI 5588-65 - **Box quantity:** 24 pieces.

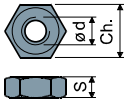

ø d	M8	M10	M12	M14
S mm	6,5	8	10	11
Ch. mm	13	17	19	22
Zinc plated steel codes	7634	7269	7270	7271
Stainless steel codes	7635	7272	7273	7274

On request
- **Bases:** In reinforced polypropylene • other colours.
- **Spindles with:** Sunk hexagon head • second wrench seat head • hexagon wrench seat • threads with other pitches and lengths.
- **Box quantity:** Not standard.
- **Assembling of:** Anti-slip pads • nuts • washers.

Articulated feet

(base in reinforced polyamide)

Part. **18** ø **60**

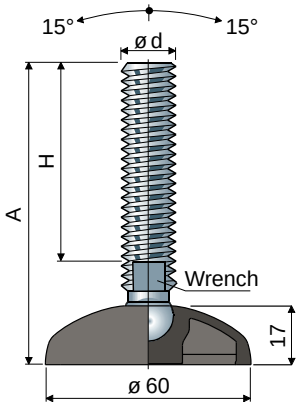

Spindle measures in mm				Spindle material			
ød	A	H	Wrench	Zinc plated steel Code	Stainless steel AISI 304 Code	Stainless steel AISI 316 Code	Max static load (N)
M8	72	45	6	**18 / 7402**	**18 / 7403**	-	12000
	92	65	6	**18 / 7404**	**18 / 7405**	-	
	134	107	6	**18 / 7898**	**18 / 7899**	-	
M10	64	35	8	**18 / 7036**	**18 / 7037**	-	13000
	99	70	8	**18 / 7038**	**18 / 7039**	-	
	144	115	8	**18 / 7040**	**18 / 7041**	-	
M12	74	43	10	**18 / 7042**	**18 / 7043**	-	14000
	94	63	10	**18 / 7044**	**18 / 7045**	-	
	109	77	10	**18 / 7406**	**18 / 7407**	-	
	124	93	10	**18 / 7046**	**18 / 7047**	**18 / 85119**	
	154	123	10	**18 / 7048**	**18 / 7049**	-	
M14	94	61	12	**18 / 7050**	**18 / 7051**	-	15000
	124	91	12	**18 / 7052**	**18 / 7053**	-	
	149	116	12	**18 / 7888**	**18 / 7889**	-	
M16	95	60	13	**18 / 7054**	**18 / 7055**	**18 / 85120**	17000
	125	90	13	**18 / 7408**	**18 / 7409**	-	
	140	105	13	**18 / 7056**	**18 / 7057**	-	
	160	125	13	**18 / 7058**	**18 / 7059**	**18 / 85121**	
	190	155	13	**18 / 7410**	**18 / 7411**	-	
	200	165	13	**18 / 7060**	**18 / 7061**	-	
	240	205	13	**18 / 83156**	**18 / 83157**	-	
M20	125	86	17	**18 / 7062**	**18 / 7063**	-	19000
	155	116	17	**18 / 7064**	**18 / 7065**	-	
	180	141	17	**18 / 7066**	**18 / 7067**	**18 / 85122**	
	245	206	17	**18 / 7068**	**18 / 7069**	-	

Spindle measures in inches				Spindle material		
ød	A	H	Wrench	Zinc plated steel Code	Stainless steel AISI 304 Code	Max static load (N)
1/2"-13 UNC	5,24"	4"	7/16"	**18 / 83270**	**18 / 83271**	14000
5/8"-11 UNC	8,36"	7"	1/2"	**18 / 83272**	**18 / 83273**	17000
3/4"-10 UNC	8,43"	7"	5/8"	**18 / 83274**	**18 / 83275**	19000

Base material: Reinforced polyamide black colour.
Box quantity: 24 pieces.

Accessories
Anti-slip pads:
- **code:** 7265;
- **material:** thermoplastic rubber 68 Shore black colour;
- **box quantity:** 24 pieces.

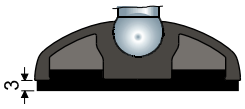

Washers UNI 6592-69 - **Box quantity:** 24 pieces.

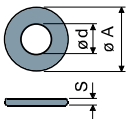

ø M	M8	M10	M12	M14	M16	M20
Smm	1,6	2	2,5	2,5	3	3
ø A mm	17	21	24	28	30	37
Zinc plated steel codes	7636	7283	7284	7285	7289	7290
Stainless steel codes	7637	7286	7287	7288	7291	7292

Nuts UNI 5588-65 - **Box quantity:** 24 pieces.

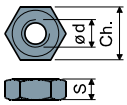

ø d	M8	M10	M12	M14	M16	M20
Smm	6,5	8	10	11	13	16
Ch. mm	13	17	19	22	24	30
Zinc plated steel codes	7634	7269	7270	7271	7275	7276
Stainless steel codes	7635	7272	7273	7274	7277	7278

On request
- **Bases:** In reinforced polypropylene • other colours.
- **Spindles with:** Sunk hexagon head • second wrench seat head • hexagon wrench seat • threads with other pitches and lengths.
- **Box quantity:** Not standard.
- **Assembling of:** Anti-slip pads • nuts • washers.

Articulated feet

(base in reinforced polyamide)

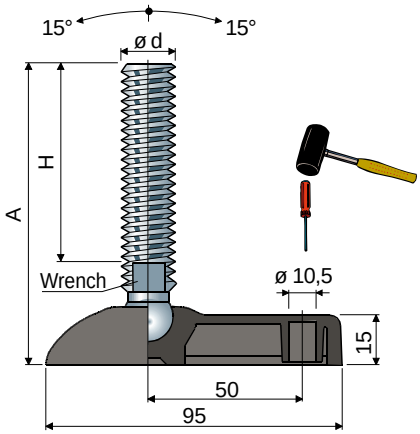

60X95 Part. **27**

Spindle measures in mm				Spindle material			
ød	A	H	Wrench	Zinc plated steel Code	Stainless steel AISI 304 Code	Stainless steel AISI 316 Code	Max static load (N)
M8	72	45	6	**27 / 7412**	**27 / 7413**	-	12000
	92	65	6	**27 / 7414**	**27 / 7415**	-	
	134	107	6	**27 / 7900**	**27 / 7901**	-	
M10	64	35	8	**27 / 7416**	**27 / 7417**	-	13000
	99	70	8	**27 / 7418**	**27 / 7419**	-	
	144	115	8	**27 / 7420**	**27 / 7421**	-	
M12	74	43	10	**27 / 7422**	**27 / 7423**	-	14000
	94	63	10	**27 / 7424**	**27 / 7425**	-	
	109	77	10	**27 / 7426**	**27 / 7427**	-	
	124	93	10	**27 / 7428**	**27 / 7429**	**27 / 85171**	
	154	123	10	**27 / 7430**	**27 / 7431**	-	
M14	94	61	12	**27 / 7432**	**27 / 7433**	-	15000
	124	91	12	**27 / 7434**	**27 / 7435**	-	
	149	116	12	**27 / 7890**	**27 / 7891**	-	
M16	95	60	13	**27 / 7436**	**27 / 7437**	**27 / 85172**	17000
	125	90	13	**27 / 7438**	**27 / 7439**	-	
	140	105	13	**27 / 7440**	**27 / 7441**	-	
	160	125	13	**27 / 7442**	**27 / 7443**	**27 / 85173**	
	190	155	13	**27 / 7444**	**27 / 7445**	-	
	200	165	13	**27 / 7446**	**27 / 7447**	-	
	240	205	13	**27 / 83158**	**27 / 83159**	-	
M20	125	86	17	**27 / 7448**	**27 / 7449**	-	19000
	155	116	17	**27 / 7450**	**27 / 7451**	-	
	180	141	17	**27 / 7452**	**27 / 7453**	**27 / 85174**	
	245	206	17	**27 / 7454**	**27 / 7455**	-	

Spindle measures in inches				Spindle material		
ød	A	H	Wrench	Zinc plated steel Code	Stainless steel AISI 304 Code	Max static load (N)
1/2"-13 UNC	5,24"	4"	7/16"	**27 / 83276**	**27 / 83277**	14000
5/8"-11 UNC	8,38"	7"	1/2"	**27 / 83278**	**27 / 83279**	17000
3/4"-10 UNC	8,47"	7"	5/8"	**27 / 83280**	**27 / 83281**	19000

Base material: Reinforced polyamide black colour.
Box quantity: 24 pieces.

Accessories
Anti-slip pads:
- **code:** 7632;
- **material:** thermoplastic rubber 68 Shore black colour;
- **box quantity:** 24 pieces.

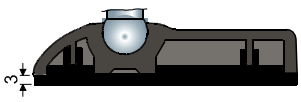

Washers UNI 6592-69 - **Box quantity:** 24 pieces.

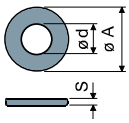

øM	M8	M10	M12	M14	M16	M20
Smm	1,6	2	2,5	2,5	3	3
øAmm	17	21	24	28	30	37
Zinc plated steel codes	7636	7283	7284	7285	7289	7290
Stainless steel codes	7637	7286	7287	7288	7291	7292

Nuts UNI 5588-65 - **Box quantity:** 24 pieces.

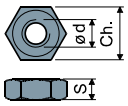

ø d	M8	M10	M12	M14	M16	M20
Smm	6,5	8	10	11	13	16
Ch. mm	13	17	19	22	24	30
Zinc plated steel codes	7634	7269	7270	7271	7275	7276
Stainless steel codes	7635	7272	7273	7274	7277	7278

On request
- **Bases:** In reinforced polypropylene • other colours • with prebored fixing holes.
- **Spindles with:** Sunk hexagon head • second wrench seat head • hexagon wrench seat • threads with other pitches and lengths.
- **Box quantity:** Not standard.
- **Assembling of:** Anti-slip pads • nuts • washers.

Articulated feet

(base in reinforced polyamide)

Part. **25** **ø 80**

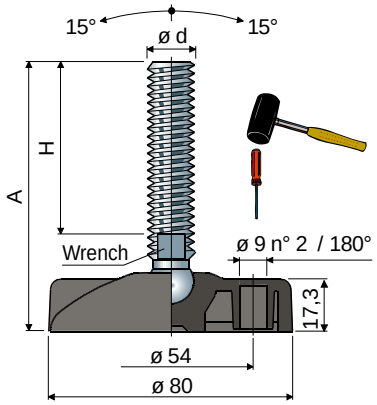

Spindle measures in mm				Spindle material			
ød	A	H	Wrench	Zinc plated steel Code	Stainless steel AISI 304 Code	Stainless steel AISI 316 Code	Max static load (N)
M8	74	45	6	**25 / 7456**	**25 / 7457**	-	12000
	94	65	6	**25 / 7458**	**25 / 7459**	-	
	136	107	6	**25 / 7902**	**25 / 7903**	-	
M10	66	35	8	**25 / 7070**	**25 / 7071**	-	14000
	101	70	8	**25 / 7072**	**25 / 7073**	-	
	146	115	8	**25 / 7074**	**25 / 7075**	-	
M12	76	43	10	**25 / 7076**	**25 / 7077**	-	15000
	96	63	10	**25 / 7078**	**25 / 7079**	-	
	111	77	10	**25 / 7460**	**25 / 7461**	-	
	126	93	10	**25 / 7080**	**25 / 7081**	**25 / 85123**	
	156	123	10	**25 / 7082**	**25 / 7083**	-	
M14	96	61	12	**25 / 7084**	**25 / 7085**	-	16000
	126	91	12	**25 / 7086**	**25 / 7087**	-	
	151	116	12	**25 / 7892**	**25 / 7893**	-	
M16	97	60	13	**25 / 7088**	**25 / 7089**	**25 / 85124**	19000
	127	90	13	**25 / 7462**	**25 / 7463**	-	
	142	105	13	**25 / 7090**	**25 / 7091**	-	
	162	125	13	**25 / 7092**	**25 / 7093**	**25 / 85125**	
	192	155	13	**25 / 7464**	**25 / 7465**	-	
	202	165	13	**25 / 7094**	**25 / 7095**	-	
	242	205	13	**25 / 83160**	**25 / 83161**	-	
M20	127	86	17	**25 / 7096**	**25 / 7097**	-	21000
	157	116	17	**25 / 7098**	**25 / 7099**	-	
	182	141	17	**25 / 7100**	**25 / 7101**	**25 / 85126**	
	247	206	17	**25 / 7102**	**25 / 7103**	-	
M24	137	96	19	**25 / 7466**	**25 / 7467**	-	23000
	163	122	19	**25 / 7104**	**25 / 7105**	-	
	193	152	19	**25 / 7106**	**25 / 7107**	-	
	223	182	19	**25 / 7108**	**25 / 7109**	-	
	341	300	19	**25 / 7472**	**25 / 7473**	-	

Spindle measures in inches				Spindle material		
ød	A	H	Wrench	Zinc plated steel Code	Stainless steel AISI 304 Code	Max static load (N)
1/2"-13 UNC	5,20"	4"	7/16"	**25 / 83282**	**25 / 83283**	15000
5/8"-11 UNC	8,32"	7"	1/2"	**25 / 83284**	**25 / 83285**	19000
3/4"-10 UNC	8,41"	7"	5/8"	**25 / 83286**	**25 / 83287**	21000

Base material: Reinforced polyamide black colour.
Box quantity: 24 pieces.

Accessories
Anti-slip pads:
- **code:** 7266;
- **material:** thermoplastic rubber 68 Shore black colour;
- **box quantity:** 24 pieces.

Washers UNI 6592-69 - **Box quantity:** 24 pieces.

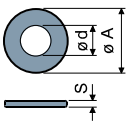

ø M	M8	M10	M12	M14	M16	M20	M24
Smm	1,6	2	2,5	2,5	3	3	4
ø A mm	17	21	24	28	30	37	44
Zinc plated steel codes	7636	7283	7284	7285	7289	7290	7293
Stainless steel codes	7637	7286	7287	7288	7291	7292	7294

Nuts UNI 5588-65 - **Box quantity:** 24 pieces.

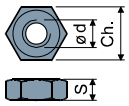

ø d	M8	M10	M12	M14	M16	M20	M24
Smm	6,5	8	10	11	13	16	19
Ch. mm	13	17	19	22	24	30	36
Zinc plated steel codes	7634	7269	7270	7271	7275	7276	7279
Stainless steel codes	7635	7272	7273	7274	7277	7278	7280

On request
- **Bases:** In reinforced polypropylene • other colours • with prebored fixing holes.
- **Spindles with:** Sunk hexagon head • second wrench seat head • hexagon wrench seat • threads with other pitches and lengths.
- **Box quantity:** Not standard.
- **Assembling of:** Anti-slip pads • nuts • washers.

Articulated feet

(base in reinforced polyamide)

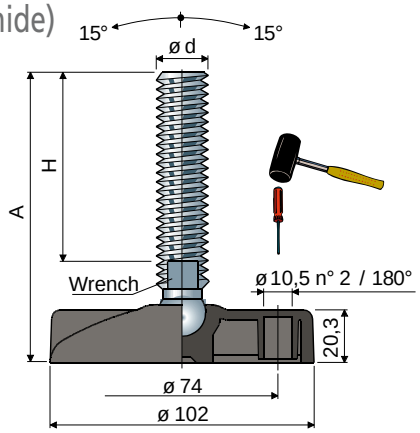

ø 102 Part. **38**

Spindle measures in mm				Spindle material			
ød	A	H	Wrench	Zinc plated steel Code	Stainless steel AISI 304 Code	Stainless steel AISI 316 Code	Max static load (N)
M12	79	43	10	**38 / 83166**	**38 / 83167**	-	15000
	99	63	10	**38 / 83168**	**38 / 83169**	-	
	114	78	10	**38 / 83170**	**38 / 83171**	-	
	129	93	10	**38 / 83172**	**38 / 83173**	**38 / 85127**	
	159	123	10	**38 / 83174**	**38 / 83175**	-	
M14	99	61	12	**38 / 83176**	**38 / 83177**	-	18000
	129	91	12	**38 / 83178**	**38 / 83179**	-	
	154	116	12	**38 / 83180**	**38 / 83181**	-	
M16	100	60	13	**38 / 7110**	**38 / 7111**	**38 / 85128**	22000
	130	90	13	**38 / 7474**	**38 / 7475**	-	
	145	105	13	**38 / 7112**	**38 / 7113**	-	
	165	125	13	**38 / 7114**	**38 / 7115**	**38 / 85129**	
	195	155	13	**38 / 7476**	**38 / 7477**	-	
	205	165	13	**38 / 7116**	**38 / 7117**	-	
	245	205	13	**38 / 83182**	**38 / 83183**	-	
M20	130	86	17	**38 / 7118**	**38 / 7119**	-	24000
	160	116	17	**38 / 7120**	**38 / 7121**	-	
	185	141	17	**38 / 7122**	**38 / 7123**	**38 / 85130**	
	250	206	17	**38 / 7124**	**38 / 7125**	-	
M24	140	96	19	**38 / 7478**	**38 / 7479**	-	26000
	166	122	19	**38 / 7126**	**38 / 7127**	-	
	196	152	19	**38 / 7128**	**38 / 7129**	-	
	226	182	19	**38 / 7130**	**38 / 7131**	-	
	344	300	19	**38 / 7484**	**38 / 7485**	-	

Spindle measures in mm				Spindle material	
ød	A	H	Wrench	Stainless steel AISI 304 Code	Max static load (N)
M24x2	182	138	19	**38 / 85475**	26000
	197	153	19	**38 / 85477**	
	255	211	19	**38 / 85479**	
	300	256	19	**38 / 85481**	

NEW

Spindle measures in inches				Spindle material		
ød	A	H	Wrench	Zinc plated steel Code	Stainless steel AISI 304 Code	Max static load (N)
1/2"-13 UNC	5,44"	4"	7/16"	**38 / 83288**	**38 / 83289**	15000
5/8"-11 UNC	8,57"	7"	1/2"	**38 / 83290**	**38 / 83291**	22000
3/4"-10 UNC	8,65"	7"	5/8"	**38 / 83292**	**38 / 83293**	24000

Base material: Reinforced polyamide black colour.
Box quantity: 24 pieces.

Accessories

Anti-slip pads:
- **code:** 7267;
- **material:** thermoplastic rubber 68 Shore black colour;
- **box quantity:** 24 pieces.

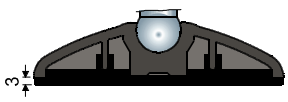

Washers UNI 6592-69 - **Box quantity:** 24 pieces.

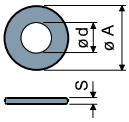

ø M	M12	M14	M16	M20	M24
Smm	2,5	2,5	3	3	4
ø A mm	24	28	30	37	44
Zinc plated steel codes	7284	7285	7289	7290	7293
Stainless steel codes	7287	7288	7291	7292	7294

Nuts UNI 5588-65 - **Box quantity:** 24 pieces.

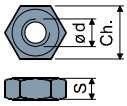

ø d	M12	M14	M16	M20	M24
Smm	10	11	13	16	19
Ch. mm	19	22	24	30	36
Zinc plated steel codes	7270	7271	7275	7276	7279
Stainless steel codes	7273	7274	7277	7278	7280

On request
- **Bases:** In reinforced polypropylene • other colours • with prebored fixing holes.
- **Spindles with:** Sunk hexagon head • second wrench seat head • hexagon wrench seat • threads with other pitches and lengths.
- **Box quantity:** Not standard.
- **Assembling of:** Anti-slip pads • nuts • washers.

Articulated feet

(base in reinforced polyamide)

Part. 45 ø 124

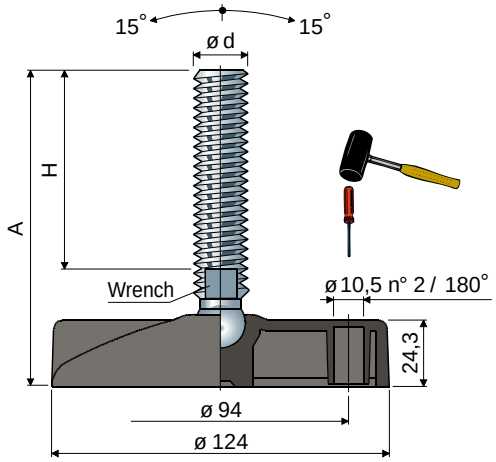

Spindle measures in mm				Spindle material			
ød	A	H	Wrench	Zinc plated steel Code	Stainless steel AISI 304 Code	Stainless steel AISI 316 Code	Max static load (N)
M14	103	61	12	**45 / 83184**	**45 / 83185**	-	18000
	133	91	12	**45 / 83186**	**45 / 83187**	-	
	158	116	12	**45 / 83188**	**45 / 83189**	-	
M16	104	60	13	**45 / 7132**	**45 / 7133**	**45 / 85131**	25000
	134	90	13	**45 / 7486**	**45 / 7487**	-	
	149	105	13	**45 / 7134**	**45 / 7135**	-	
	169	125	13	**45 / 7136**	**45 / 7137**	**45 / 85132**	
	199	155	13	**45 / 7488**	**45 / 7489**	-	
	209	165	13	**45 / 7138**	**45 / 7139**	-	
	249	205	13	**45 / 83162**	**45 / 83163**	-	
M20	134	86	17	**45 / 7140**	**45 / 7141**	-	27000
	164	116	17	**45 / 7142**	**45 / 7143**	-	
	189	141	17	**45 / 7144**	**45 / 7145**	**45 / 85133**	
	254	206	17	**45 / 7146**	**45 / 7147**	-	
M24	144	96	19	**45 / 7490**	**45 / 7491**	-	29000
	170	122	19	**45 / 7148**	**45 / 7149**	-	
	200	152	19	**45 / 7150**	**45 / 7151**	-	
	230	182	19	**45 / 7152**	**45 / 7153**	-	
	348	300	19	**45 / 7496**	**45 / 7497**	-	

Spindle measures in mm				Spindle material	
ød	A	H	Wrench	Stainless steel AISI 304 Code	Max static load (N)
M24x2	186	138	19	**45 / 85483**	29000
	201	153	19	**45 / 85485**	
	259	211	19	**45 / 85487**	
	304	256	19	**45 / 85489**	

NEW

Spindle measures in inches				Spindle material		
ød	A	H	Wrench	Zinc plated steel Code	Stainless steel AISI 304 Code	Max static load (N)
5/8"-11 UNC	8,75"	7"	1/2"	**45 / 83294**	**45 / 83295**	25000
3/4"-10 UNC	8,82"	7"	5/8"	**45 / 83296**	**45 / 83297**	27000

Base material: Reinforced polyamide black colour.
Box quantity: 8 pieces.

Accessories

Anti-slip pads:
- **code:** 7268;
- **material:** thermoplastic rubber 68 Shore black colour;
- **box quantity:** 8 pieces.

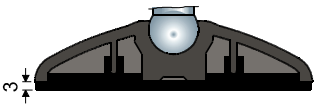

Washers UNI 6592-69 - **Box quantity:** 24 pieces.

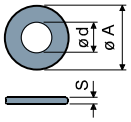

ø M	M14	M16	M20	M24
Smm	2,5	3	3	4
ø A mm	28	30	37	44
Zinc plated steel codes	7285	7289	7290	7293
Stainless steel codes	7288	7291	7292	7294

Nuts UNI 5588-65 - **Box quantity:** 24 pieces.

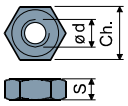

ø d	M14	M16	M20	M24
Smm	11	13	16	19
Ch. mm	22	24	30	36
Zinc plated steel codes	7271	7275	7276	7279
Stainless steel codes	7274	7277	7278	7280

On request
- **Bases:** In reinforced polypropylene • other colours • with prebored fixing holes.
- **Spindles with:** Sunk hexagon head • second wrench seat head • hexagon wrench seat • threads with other pitches and lengths.
- **Box quantity:** Not standard.
- **Assembling of:** Anti-slip pads • nuts • washers.

Articulated feet

(base in reinforced polyamide)

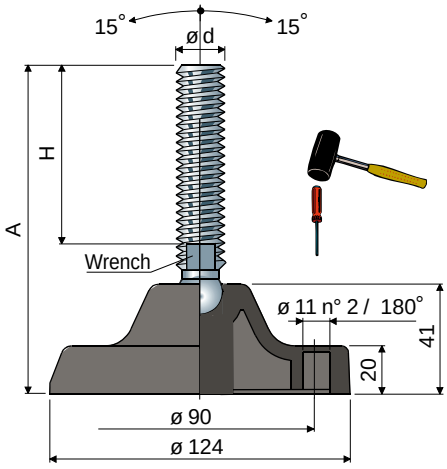

ø 124 Part. **92**

Spindle measures in mm				Spindle material			
ød	A	H	Wrench	Zinc plated steel Code	Stainless steel AISI 304 Code	Stainless steel AISI 316 Code	Max static load (N)
M16	124	60	13	**92 / 7782**	**92 / 7783**	**92 / 85134**	25000
	154	90	13	**92 / 7784**	**92 / 7785**	-	
	165	105	13	**92 / 7786**	**92 / 7787**	-	
	189	125	13	**92 / 7788**	**92 / 7789**	**92 / 85135**	
	219	155	13	**92 / 7790**	**92 / 7791**	-	
	229	165	13	**92 / 7792**	**92 / 7793**	-	
	265	205	13	**92 / 83164**	**92 / 83165**	-	
M20	153	86	17	**92 / 7794**	**92 / 7795**	-	27000
	183	116	17	**92 / 7796**	**92 / 7797**	-	
	208	141	17	**92 / 7798**	**92 / 7799**	**92 / 85136**	
	273	206	17	**92 / 7800**	**92 / 7801**	-	
M24	159	96	19	**92 / 80702**	**92 / 80703**	-	29000
	185	122	19	**92 / 80704**	**92 / 80705**	-	
	215	152	19	**92 / 80706**	**92 / 80707**	-	
	245	182	19	**92 / 80708**	**92 / 80709**	-	
	363	300	19	**92 / 80710**	**92 / 80711**	-	

Spindle measures in mm				Spindle material	
ød	A	H	Wrench	Stainless steel AISI 304 Code	Max static load (N)
M24x2	201	138	19	**92 / 85491**	29000
	216	153	19	**92 / 85493**	
	274	211	19	**92 / 85495**	
	319	256	19	**92 / 85497**	

NEW

Spindle measures in inches				Spindle material		
ød	A	H	Wrench	Zinc plated steel Code	Stainless steel AISI 304 Code	Max static load (N)
5/8"-11 UNC	9,29"	7"	1/2"	**92 / 83298**	**92 / 83299**	25000
3/4"-10 UNC	9,37"	7"	5/8"	**92 / 83300**	**92 / 83301**	27000

Base material: Reinforced polyamide black colour.
Box quantity: 8 pieces.

Accessories
Anti-slip pads:
- **code:** 7633;
- **material:** thermoplastic rubber 68 Shore black colour;
- **box quantity:** 8 pieces.

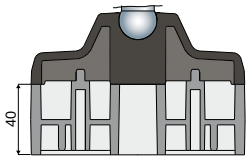

Spacers:
- **code:** 83410 (see pag. 200);
- **material:** Reinforced polyamide black colour;
- **box quantity:** 8 pieces.

Washers UNI 6592-69 - **Box quantity:** 24 pieces.

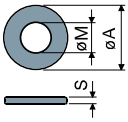

øM	M16	M20	M24
Smm	3	3	4
øAmm	30	37	44
Zinc plated steel codes	7289	7290	7293
Stainless steel codes	7291	7292	7294

Nuts UNI 5588-65 - **Box quantity:** 24 pieces.

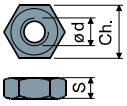

ø d	M16	M20	M24
Smm	13	16	19
Ch. mm	24	30	36
Zinc plated steel codes	7275	7276	7279
Stainless steel codes	7277	7278	7280

On request
- **Bases:** In reinforced polypropylene • other colours • with prebored fixing holes.
- **Spindles with:** Sunk hexagon head • second wrench seat head • hexagon wrench seat • threads with other pitches and lengths.
- **Box quantity:** Not standard.
- **Assembling of:** Anti-slip pads • nuts • washers.

Adjustable feet

(base in reinforced polyamide)

Part. 79 ø 50

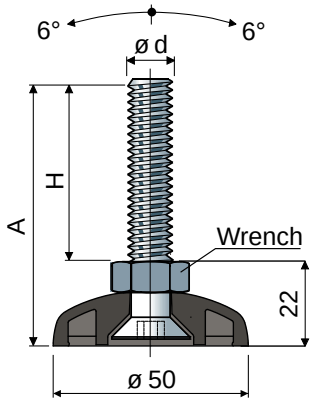

Spindle measures in mm				Spindle material		
ød	A	H	Wrench	Zinc plated steel Code	Stainless steel AISI 304 Code	Max static load (N)
M10	67	45	17	**79 / 82074**	**79 / 82075**	12000
	92	70	17	**79 / 82076**	**79 / 82077**	
	122	100	17	**79 / 82078**	**79 / 82079**	

Base material: Reinforced polyamide black colour.
Box quantity: 24 pieces.

Accessories
Anti-slip pads:
- **code:** 7264;
- **material:** thermoplastic rubber 68 Shore black colour;
- **box quantity:** 24 pieces.

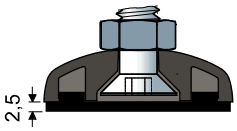

Washers UNI 6592-69 - **Box quantity:** 24 pieces.

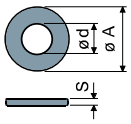

ø M	M10
Smm	2
ø A mm	21
Zinc plated steel codes	7283
Stainless steel codes	7286

Nuts UNI 5588-65 - Box quantity: 24 pieces.

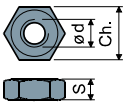

ø d	M10
Smm	8
Ch. mm	17
Zinc plated steel codes	7269
Stainless steel codes	7272

On request
- **Bases:** In reinforced polypropylene • other colours.
- **Spindles with:** Threads with other pitches and lengths.
- **Box quantity:** Not standard.
- **Assembling of:** Anti-slip pads • nuts • washers.

Adjustable feet

(base in reinforced polyamide)

ø 102 Part. **87**

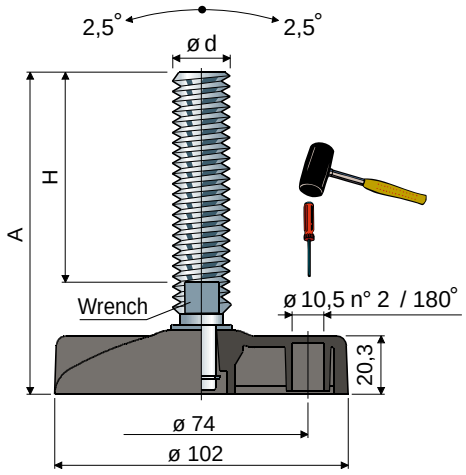

Spindle measures in mm				Spindle material			
ød	A	H	Wrench	Zinc plated steel Code	Stainless steel AISI 304 Code	Stainless steel AISI 316 Code	Max static load (N)
M16	98	58	13	**87 / 7498**	**87 / 7499**	-	33000
	159	119	13	**87 / 7904**	**87 / 7905**	-	
	185	145	13	**87 / 7154**	**87 / 7155**	-	
	241	201	13	**87 / 7156**	**87 / 7157**	-	
M18	197	157	15	**87 / 82134**	**87 / 82135**	-	
M20	150	107	17	**87 / 7158**	**87 / 7159**	-	35000
	178	135	17	**87 / 7500**	**87 / 7501**	-	
	200	157	17	**87 / 7160**	**87 / 7161**	**87 / 85137**	
	233	190	17	**87 / 83214**	**87 / 83215**	-	
	281	238	17	**87 / 83216**	**87 / 83217**	-	
M24	136	90	19	**87 / 7162**	**87 / 7163**	-	37000
	173	127	19	**87 / 7502**	**87 / 7503**	-	
	208	162	19	**87 / 7164**	**87 / 7165**	-	
	248	202	19	**87 / 83218**	**87 / 83219**	-	

Base material: Reinforced polyamide black colour.
Box quantity: 24 pieces.

Accessories

Anti-slip pads:
- **code:** 7267;
- **material:** thermoplastic rubber 68 Shore black colour;
- **box quantity:** 24 pieces.

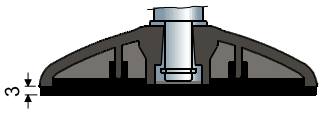

Washers UNI 6592-69 - **Box quantity:** 24 pieces.

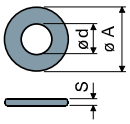

ø M	M16	M20	M24
S mm	3	3	4
ø A mm	30	37	44
Zinc plated steel codes	7289	7290	7293
Stainless steel codes	7291	7292	7294

Nuts UNI 5588-65 - **Box quantity:** 24 pieces.

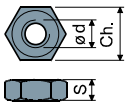

ø d	M16	M20	M24
S mm	13	16	19
Ch. mm	24	30	36
Zinc plated steel codes	7275	7276	7279
Stainless steel codes	7277	7278	7280

On request
- **Bases:** In reinforced polypropylene • other colours • with prebored fixing holes.
- **Spindles with:** Sunk hexagon head • second wrench seat head • hexagon wrench seat • threads with other pitches and lengths.
- **Box quantity:** Not standard.
- **Assembling of:** Anti-slip pads • nuts • washers.

Adjustable feet

(base in reinforced polyamide)

Part. 89 ø 124

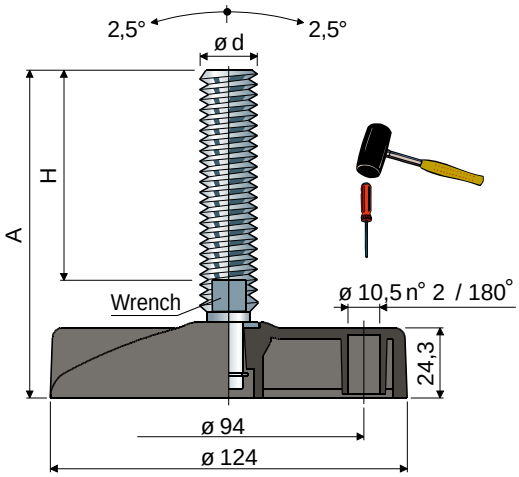

Spindle measures in mm				Spindle material			
ød	A	H	Wrench	Zinc plated steel Code	Stainless steel AISI 304 Code	Stainless steel AISI 316 Code	Max static load (N)
M16	100	58	13	**89 / 7504**	**89 / 7505**	-	43000
	161	119	13	**89 / 7906**	**89 / 7907**	-	
	187	145	13	**89 / 7166**	**89 / 7167**	-	
	243	201	13	**89 / 7168**	**89 / 7169**	-	
M18	199	157	15	**89 / 7852**	**89 / 7851**	-	
M20	152	107	17	**89 / 7170**	**89 / 7171**	-	45000
	180	135	17	**89 / 7506**	**89 / 7507**	-	
	202	157	17	**89 / 7172**	**89 / 7173**	**89 / 85138**	
	235	190	17	**89 / 83220**	**89 / 83221**	-	
	283	238	17	**89 / 83222**	**89 / 83223**	-	
M24	138	90	19	**89 / 7174**	**89 / 7175**	-	47000
	175	127	19	**89 / 7508**	**89 / 7509**	-	
	210	162	19	**89 / 7176**	**89 / 7177**	-	
	250	202	19	**89 / 83224**	**89 / 83225**	-	
M30	173	125	24	**89 / 7178**	**89 / 7179**	-	50000
	233	185	24	**89 / 7180**	**89 / 7181**	-	

Base material: Reinforced polyamide black colour.
Box quantity: 8 pieces.

Accessories

Anti-slip pads:
- **code:** 7268;
- **material:** thermoplastic rubber 68 Shore black colour;
- **box quantity:** 8 pieces.

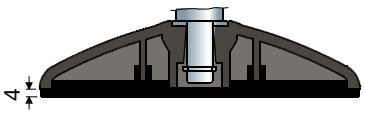

Washers UNI 6592-69 - **Box quantity:** 24 pieces.

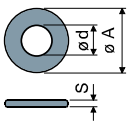

ø M	M16	M20	M24	M30
Smm	3	3	4	4
ø Amm	30	37	44	56
Zinc plated steel codes	7289	7290	7293	7295
Stainless steel codes	7291	7292	7294	7296

Nuts UNI 5588-65 - **Box quantity:** 24 pieces.

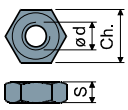

ø d	M16	M20	M24	M30
Smm	13	16	19	24
Ch. mm	24	30	36	46
Zinc plated steel codes	7275	7276	7279	7281
Stainless steel codes	7277	7278	7280	7282

On request
- **Bases:** In reinforced polypropylene • other colours • with prebored fixing holes.
- **Spindles with:** Sunk hexagon head • second wrench seat head • hexagon wrench seat • threads with other pitches and lengths.
- **Box quantity:** Not standard.
- **Assembling of:** Anti-slip pads • nuts • washers.

Articulated feet

(base in reinforced polyamide)

ø 124 Part. **93**

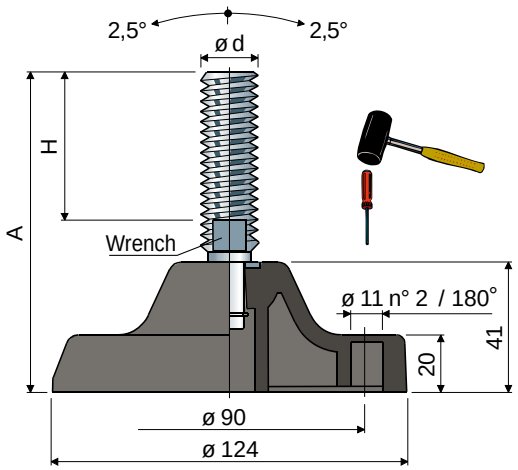

Spindle measures in mm				Spindle material			
ød	A	H	Wrench	Zinc plated steel Code	Stainless steel AISI 304 Code	Stainless steel AISI 316 Code	Max static load (N)
M16	119	58	13	**93 / 7510**	**93 / 7511**	-	43000
	180	119	13	**93 / 7908**	**93 / 7909**	-	
	206	145	13	**93 / 7512**	**93 / 7513**	-	
	262	201	13	**93 / 7514**	**93 / 7515**	-	
M18	214	157	15	**93 / 82136**	**93 / 82137**	-	
M20	171	107	17	**93 / 7516**	**93 / 7517**	-	45000
	199	135	17	**93 / 7518**	**93 / 7519**	-	
	221	157	17	**93 / 7520**	**93 / 7521**	**93 / 85139**	
	250	190	17	**93 / 83226**	**93 / 83227**	-	
	298	238	17	**93 / 83228**	**93 / 83229**	-	
M24	157	90	19	**93 / 7522**	**93 / 7523**	-	47000
	194	127	19	**93 / 7524**	**93 / 7525**	-	
	229	162	19	**93 / 7526**	**93 / 7527**	-	
	265	202	19	**93 / 83230**	**93 / 83231**	-	
M30	188	125	24	**93 / 7528**	**93 / 7529**	-	50000
	252	185	24	**93 / 7530**	**93 / 7531**	-	

Base material: Reinforced polyamide black colour.
Box quantity: 8 pieces.

Accessories

Anti-slip pads:
- **code:** 7633;
- **material:** thermoplastic rubber 68 Shore black colour;
- **box quantity:** 8 pieces.

Washers UNI 6592-69 - **Box quantity:** 24 pieces.

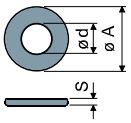

øM	M16	M20	M24	M30
Smm	3	3	4	4
øAmm	30	37	44	56
Zinc plated steel codes	7289	7290	7293	7295
Stainless steel codes	7291	7292	7294	7296

Nuts UNI 5588-65 - **Box quantity:** 24 pieces.

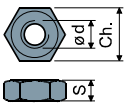

ø d	M16	M20	M24	M30
Smm	13	16	19	24
Ch. mm	24	30	36	46
Zinc plated steel codes	7275	7276	7279	7281
Stainless steel codes	7277	7278	7280	7282

Spacers:
- **code:** 83410 (see pag. 200);
- **material:** Reinforced polyamide black colour;
- **box quantity:** 8 pieces.

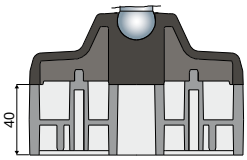

On request
- **Bases:** In reinforced polypropylene • other colours • with prebored fixing holes.
- **Spindles with:** Sunk hexagon head • second wrench seat head • hexagon wrench seat • threads with other pitches and lengths.
- **Box quantity:** Not standard.
- **Assembling of:** Anti-slip pads • nuts • washers.

Spacer

(for Part. 92, 93)

Part. **104**

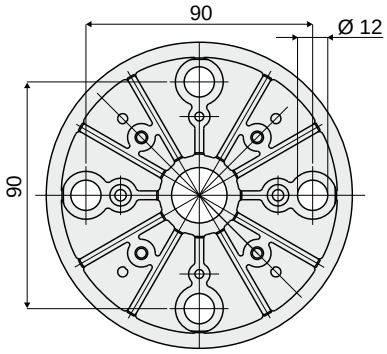

B view (spacer)

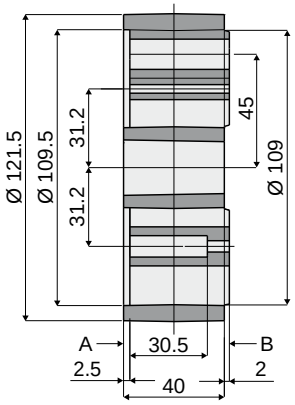

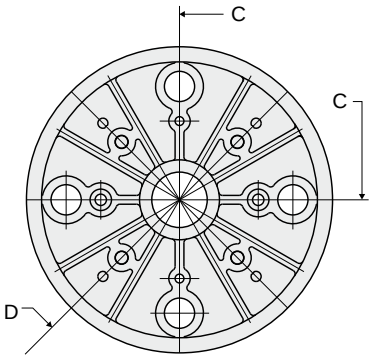

A view (spacer)

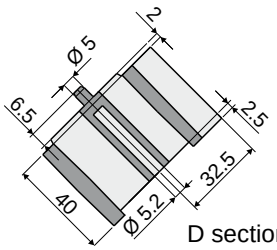

D section (blocking pins)

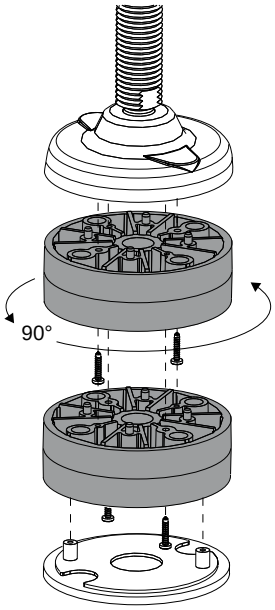

Example of application

Code
104 / 83410

Materials: Spacer in reinforced polyamide black colour.
Features: To be used with footplates part. 92 and 93 to increase the height of the footplates. It is possible to assemble the anti-slip code 7633 (see page 195, 199).
Box quantity: 8 pieces.
On request:

- **Box quantity:** According to your request.

Adjustable feet

(base in steel)

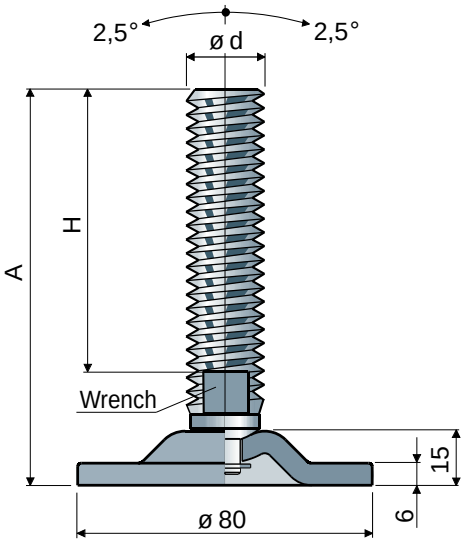

ø 80 Part. **81**

ød	Spindle measures in mm A	H	Wrench	Spindle and base in zinc plated steel Code	Max static load (N)
M20	120	87	17	**81 / 80786**	40000
	154	117	30	**81 / 84318**	
	160	127	30	**81 / 82882**	
M24	120	85	19	**81 / 80214**	

Material: Base and spindle in zinc-plated steel.
Box quantity: 8 pieces.

Washers UNI 6592-69 - **Box quantity:** 24 pieces.

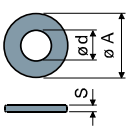

ø M	M20	M24
S mm	3	4
ø A mm	37	44
Zinc plated steel codes	7290	7293

Nuts UNI 5588-65 - **Box quantity:** 24 pieces.

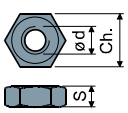

ø d	M20	M24
S mm	16	19
Ch. mm	30	36
Zinc plated steel codes	7276	7279

On request

- **Spindles with:** Sunk hexagon head • second wrench seat head • hexagon wrench seat • threads with other pitches and lengths.
- **Box quantity:** Not standard.
- **Assembling of:** Nuts • washers.

Adjustable feet

(base in steel)

Part. 96 ø 113

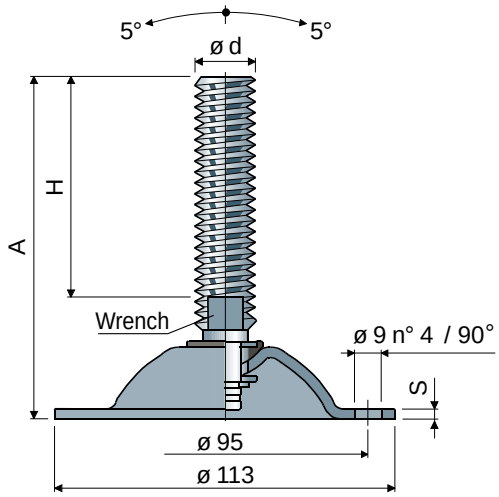

Spindle measures in mm				Spindle material		
ød	A	H	Wrench	Zinc plated steel Code	Stainless steel AISI 304 Code	Max static load (N)
M16	100	58	13	96 / 7562	96 / 7563	15000 (zinc plated) S = 3,5
	161	119	13	96 / 7916	96 / 7917	
	187	145	13	96 / 7564	96 / 7565	
	243	201	13	96 / 7566	96 / 7567	
M18	199	157	15	96 / 82138	96 / 82139	
M20	152	107	17	96 / 7568	96 / 7569	
	180	135	17	96 / 7570	96 / 7571	
	202	157	17	96 / 7572	96 / 7573	
	235	190	17	96 / 83232	96 / 83233	
	283	238	17	96 / 83234	96 / 83235	
M24	138	90	19	96 / 7574	96 / 7575	10000 (AISI 304) S = 3
	175	127	19	96 / 7576	96 / 7577	
	210	162	19	96 / 7578	96 / 7579	
	250	202	19	96 / 83236	96 / 83237	
M30	173	125	24	96 / 7580	96 / 7581	
	233	185	24	96 / 7582	96 / 7583	

Box quantity: 8 pieces.

Washers UNI 6592-69 - **Box quantity:** 24 pieces.

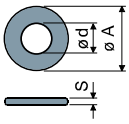

øM	M16	M20	M24	M30
Smm	3	3	4	4
øAmm	30	37	44	56
Zinc plated steel codes	7289	7290	7293	7295
Stainless steel codes	7291	7292	7294	7296

Nuts UNI 5588-65 - **Box quantity:** 24 pieces.

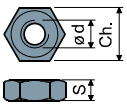

ød	M16	M20	M24	M30
Smm	13	16	19	24
Ch. mm	24	30	36	46
Zinc plated steel codes	7275	7276	7279	7281
Stainless steel codes	7277	7278	7280	7282

On request

- **Spindles with:** Sunk hexagon head • second wrench seat head • hexagon wrench seat • threads with other pitches and lengths • stainless steel AISI 316.
- **Box quantity:** Not standard.
- **Assembling of:** Nuts • washers.

Adjustable feet

(base in steel)

ø 113 Part. **98**

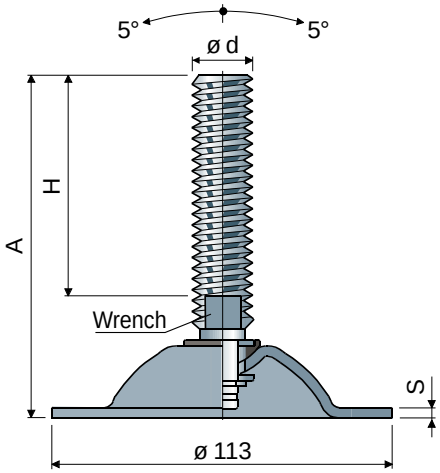

Spindle measures in mm				Spindle material		
ød	A	H	Wrench	Zinc plated steel Code	Stainless steel AISI 304 Code	Max static load (N)
M16	100	58	13	**98 / 7584**	**98 / 7585**	15000 (zinc plated) S = 3,5
	161	119	13	**98 / 7918**	**98 / 7919**	
	187	145	13	**98 / 7586**	**98 / 7587**	
	243	201	13	**98 / 7588**	**98 / 7589**	
M18	199	157	15	**98 / 82140**	**98 / 82141**	
M20	152	107	17	**98 / 7590**	**98 / 7591**	
	180	135	17	**98 / 7592**	**98 / 7593**	
	202	157	17	**98 / 7594**	**98 / 7595**	
	235	190	17	**98 / 83238**	**98 / 83239**	
	283	238	17	**98 / 83240**	**98 / 83241**	
M24	138	90	19	**98 / 7596**	**98 / 7597**	10000 (AISI 304) S = 3
	175	127	19	**98 / 7598**	**98 / 7599**	
	210	162	19	**98 / 7600**	**98 / 7601**	
	250	202	19	**98 / 83242**	**98 / 83243**	
M30	173	125	24	**98 / 7602**	**98 / 7603**	
	233	185	24	**98 / 7604**	**98 / 7605**	

Box quantity: 8 pieces.

Washers UNI 6592-69 - **Box quantity:** 24 pieces.

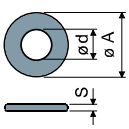

øM	M16	M20	M24	M30
Smm	3	3	4	4
øAmm	30	37	44	56
Zinc plated steel codes	7289	7290	7293	7295
Stainless steel codes	7291	7292	7294	7296

Nuts UNI 5588-65 - **Box quantity:** 24 pieces.

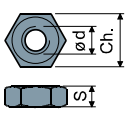

ø d	M16	M20	M24	M30
Smm	13	16	19	24
Ch. mm	24	30	36	46
Zinc plated steel codes	7275	7276	7279	7281
Stainless steel codes	7277	7278	7280	7282

On request

- **Spindles with:** Sunk hexagon head • second wrench seat head • hexagon wrench seat • threads with other pitches and lengths • stainless steel AISI 316.
- **Box quantity:** Not standard.
- **Assembling of:** Nuts • washers.

Adjustable feet

(base in zinc plated steel)

Part. 94 ⌀ 180

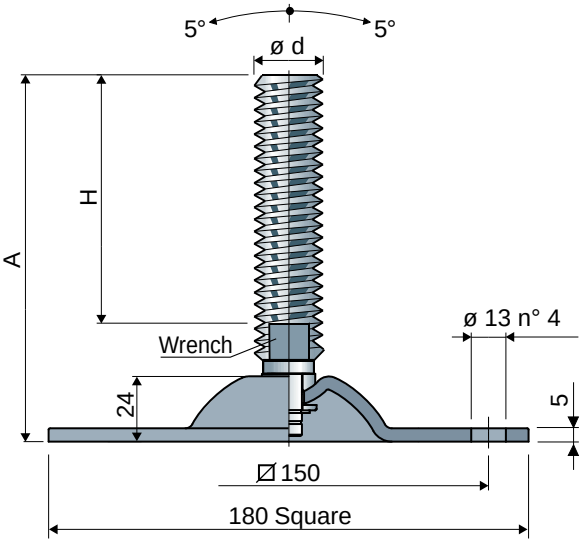

ød	Spindle measures in mm A	H	Wrench	Spindle and base in zinc plated steel Code	Max static load (N)
M16	100	57	13	94 / 82968	45000
	161	118	13	94 / 82970	
	187	144	13	94 / 82972	
	243	200	13	94 / 82974	
M18	199	157	15	94 / 82976	46000
M20	152	107	17	94 / 82978	47000
	181	136	17	94 / 82980	
	202	157	17	94 / 82982	
	235	190	17	94 / 82984	
	283	238	17	94 / 83262	
M24	138	90	19	94 / 82986	48000
	175	127	19	94 / 82988	
	210	162	19	94 / 82990	
	250	202	19	94 / 83264	
M30	173	125	24	94 / 82992	49000
	233	185	24	94 / 82994	

Box quantity: 8 pieces.

Washers UNI 6592-69 - **Box quantity:** 24 pieces.

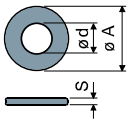

øM	M16	M20	M24	M30
Smm	3	3	4	4
øAmm	30	37	44	56
Zinc plated steel codes	7289	7290	7293	7295

Nuts UNI 5588-65 - **Box quantity:** 24 pieces.

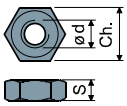

ød	M16	M20	M24	M30
Smm	13	16	19	24
Ch. mm	24	30	36	46
Zinc plated steel codes	7275	7276	7279	7281

On request

- **Spindles with:** Sunk hexagon head • second wrench seat head • hexagon wrench seat • threads with other pitches and lengths.
- **Box quantity:** Not standard.
- **Assembling of:** Nuts • washers.

Adjustable feet

(base in nickel plated steel)

ø 80 Part. **95**

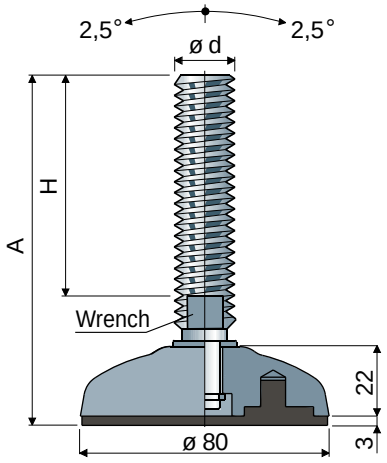

Spindle measures in mm				Spindle material		
ød	A	H	Wrench	Zinc plated steel Code	Stainless steel AISI 304 Code	Max static load (N)
M16	101	58	13	**95 / 7532**	**95 / 7533**	46000
	162	119	13	**95 / 7910**	**95 / 7911**	
	188	145	13	**95 / 7534**	**95 / 7535**	
	244	201	13	**95 / 7536**	**95 / 7537**	
M18	200	157	15	**95 / 82144**	**95 / 82145**	
M20	153	107	17	**95 / 7538**	**95 / 7539**	47000
	181	135	17	**95 / 7540**	**95 / 7541**	
	203	157	17	**95 / 7542**	**95 / 7543**	
	236	190	17	**95 / 83244**	**95 / 83245**	
	284	238	17	**95 / 83246**	**95 / 83247**	
M24	139	90	19	**95 / 7544**	**95 / 7545**	48000
	176	127	19	**95 / 7546**	**95 / 7547**	
	211	162	19	**95 / 7548**	**95 / 7549**	
	250	202	19	**95 / 83248**	**95 / 83249**	

Base material: Nickel plated steel.
Box quantity: 8 pieces.
Features: The feet are complete with anti-slip pad made out of thermoplastic rubber 68 Shore black colour.

Washers UNI 6592-69 - **Box quantity:** 24 pieces.

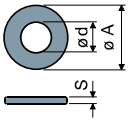

øM	M16	M20	M24
Smm	3	3	4
øAmm	30	37	44
Zinc plated steel codes	7289	7290	7293
Stainless steel codes	7291	7292	7294

Nuts UNI 5588-65 - **Box quantity:** 24 pieces.

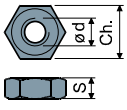

ø d	M16	M20	M24
Smm	13	16	19
Ch. mm	24	30	36
Zinc plated steel codes	7275	7276	7279
Stainless steel codes	7277	7278	7280

On request
- **Spindles with:** Sunk hexagon head • second wrench seat head • hexagon wrench seat • threads with other pitches and lengths • stainless steel AISI 316.
- **Box quantity:** Not standard.
- **Assembling of:** Nuts • washers.

Adjustable feet

(base in nickel plated steel)

Part. 97 ø 102

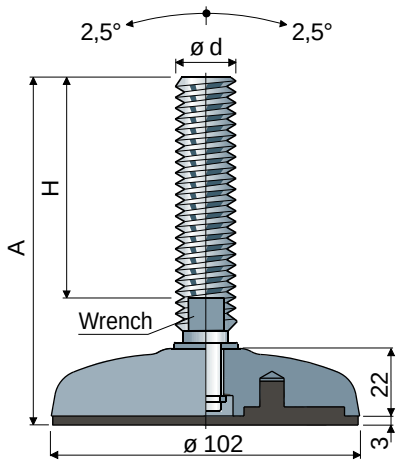

Spindle measures in mm				Spindle material		
ød	A	H	Wrench	Zinc plated steel Code	Stainless steel AISI 304 Code	Max static load (N)
M16	101	58	13	97 / 7550	97 / 7551	50000
	162	119	13	97 / 7912	97 / 7913	
	188	145	13	97 / 7182	97 / 7183	
	244	201	13	97 / 7184	97 / 7185	
M18	200	157	15	97 / 82146	97 / 82147	51000
M20	153	107	17	97 / 7186	97 / 7187	
	181	135	17	97 / 7552	97 / 7553	
	203	157	17	97 / 7188	97 / 7189	
	236	190	17	97 / 83250	97 / 83251	
	284	238	17	97 / 83252	97 / 83253	
M24	139	90	19	97 / 7190	97 / 7191	52000
	176	127	19	97 / 7554	97 / 7555	
	211	162	19	97 / 7192	97 / 7193	
	250	202	19	97 / 83254	97 / 83255	

Base material: Nickel plated steel.
Box quantity: 8 pieces.
Features: The feet are complete with anti-slip pad made out of thermoplastic rubber 68 Shore black colour .

Washers UNI 6592-69 - **Box quantity:** 24 pieces.

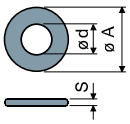

ø M	M16	M20	M24
S mm	3	3	4
ø A mm	30	37	44
Zinc plated steel codes	7289	7290	7293
Stainless steel codes	7291	7292	7294

Nuts UNI 5588-65 - **Box quantity:** 24 pieces.

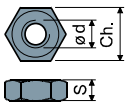

ø d	M16	M20	M24
S mm	13	16	19
Ch. mm	24	30	36
Zinc plated steel codes	7275	7276	7279
Stainless steel codes	7277	7278	7280

On request

- **Spindles with:** Sunk hexagon head • second wrench seat head • hexagon wrench seat • threads with other pitches and lengths • stainless steel AISI 316.
- **Box quantity:** Not standard.
- **Assembling of:** Nuts • washers.

Adjustable feet

(base in nickel plated steel)

ø 124 Part. **99**

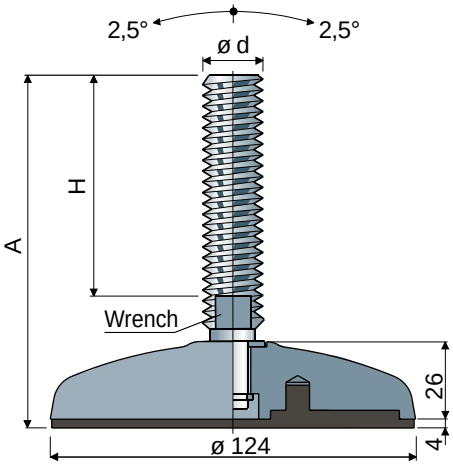

Spindle measures in mm				Spindle material		
ød	A	H	Wrench	Zinc plated steel Code	Stainless steel AISI 304 Code	Max static load (N)
M16	104	58	13	99 / 7556	99 / 7557	55000
	165	119	13	99 / 7914	99 / 7915	
	191	145	13	99 / 7194	99 / 7195	
	247	201	13	99 / 7196	99 / 7197	
M18	203	157	15	99 / 82148	99 / 82149	
M20	156	107	17	99 / 7198	99 / 7199	56000
	184	135	17	99 / 7558	99 / 7559	
	206	157	17	99 / 7200	99 / 7201	
	239	190	17	99 / 83256	99 / 83257	
	287	238	17	99 / 83258	99 / 83259	
M24	142	90	19	99 / 7202	99 / 7203	57000
	179	127	19	99 / 7560	99 / 7561	
	214	162	19	99 / 7204	99 / 7205	
	254	202	19	99 / 83260	99 / 83261	
M30	177	125	24	99 / 7206	99 / 7207	58000
	237	185	24	99 / 7208	99 / 7209	

Base material: Nickel plated steel.
Box quantity: 8 pieces.
Features: The feet are complete with anti-slip pad made out of thermoplastic rubber 68 Shore black colour .

Washers UNI 6592-69 - **Box quantity:** 24 pieces.

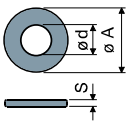

øM	M16	M20	M24	M30
Smm	3	3	4	4
øAmm	30	37	44	56
Zinc plated steel codes	7289	7290	7293	7295
Stainless steel codes	7291	7292	7294	7296

Nuts UNI 5588-65 - **Box quantity:** 24 pieces.

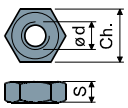

ø d	M16	M20	M24	M30
Smm	13	16	19	24
Ch. mm	24	30	36	46
Zinc plated steel codes	7275	7276	7279	7281
Stainless steel codes	7277	7278	7280	7282

On request

- **Spindles with:** Sunk hexagon head • second wrench seat head • hexagon wrench seat • threads with other pitches and lengths • stainless steel AISI 316.
- **Box quantity:** Not standard.
- **Assembling of:** Nuts • washers.

Adjustable feet, sanitizable

(Stainless steel base for important loads)

Part. **115 ø 78**

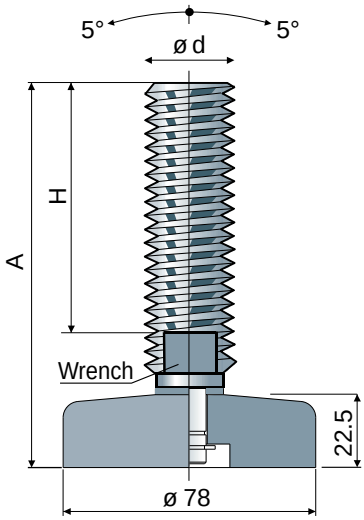

ød	Spindle measures in mm A	H	Wrench	Spindle and base in stainless steel AISI 304 Code	Max static load (N)
M16	99	58	13	**115 / 83958**	52000
	160	119	13	**115 / 83959**	
	186	145	13	**115 / 83960**	
	241	200	13	**115 / 83961**	
M20	148	107	17	**115 / 83962**	
	177	136	17	**115 / 83963**	
	198	157	17	**115 / 83964**	
	231	190	17	**115 / 83965**	
	279	238	17	**115 / 83966**	
M24	136	90	19	**115 / 83967**	
	173	127	19	**115 / 83968**	
	208	162	19	**115 / 83969**	
	248	202	19	**115 / 83970**	
M30	171	125	24	**115 / 83971**	
	231	185	24	**115 / 83831**	

Material: Spindle and base in stainless steel AISI 304.
Box quantity: 8 pieces.

Washers UNI 6592-69 - **Box quantity:** 24 pieces.

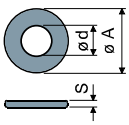

øM	M16	M20	M24	M30
Smm	3	3	4	4
øAmm	30	37	44	56
Stainless steel codes	7291	7292	7294	7296

Nuts UNI 5588-65 - **Box quantity:** 24 pieces.

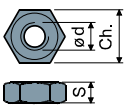

ød	M16	M20	M24	M30
Smm	13	16	19	24
Ch. mm	24	30	36	46
Stainless steel codes	7277	7278	7280	7282

On request

- **Spindles with:** Sunk hexagon head • second wrench seat head • hexagon wrench seat • threads with other pitches and lengths • stainless steel AISI 316.
- **Box quantity:** Not standard.
- **Assembling of:** Nuts • washers.

Articulated feet, sanitizable

(base in stainless steel)

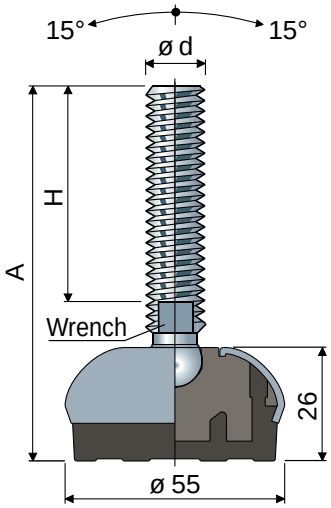

ø 55 Part. **113**

ød	Spindle measures in mm A	H	Wrench	Spindle and base in stainless steel AISI 304 Code	Max static load (N)
M8	80	45	6	**113 / 83791**	11000
	100	65	6	**113 / 83792**	
	142	107	6	**113 / 83793**	
M10	71	35	8	**113 / 83794**	12000
	107	70	8	**113 / 83795**	
	152	115	8	**113 / 83796**	
M12	82	43	10	**113 / 83797**	13000
	102	63	10	**113 / 83798**	
	116	77	10	**113 / 83799**	
	132	93	10	**113 / 83822**	
	162	123	10	**113 / 83823**	
M14	102	61	12	**113 / 83824**	14000
	132	91	12	**113 / 83825**	
	157	116	12	**113 / 83826**	
M16	103	60	13	**113 / 83784**	15000
	133	90	13	**113 / 83785**	
	148	105	13	**113 / 83786**	
	168	125	13	**113 / 83787**	
	198	155	13	**113 / 83788**	
	208	165	13	**113 / 83789**	
	248	205	13	**113 / 83790**	

ød	Spindle measures in inches A	H	Wrench	Spindle and base in stainless steel AISI 304 Code	Max static load (N)
1/2"-13 UNC	5,19"	4"	7/16"	**113 / 83827**	13000
5/8"-11 UNC	8,70"	7"	1/2"	**113 / 83800**	15000
3/4"-10 UNC	8,78"	7"	5/8"	**113 / 83801**	19000

Material: Internal part made of reinforced polyamide; external covering made of stainless steel AISI 304; anti-slip pad made of thermoplastic rubber 68 Shore black colour.
Box quantity: 8 pieces.
Features: Comoulded anti-slip pad allows a perfect adherence with steel base. Consequent absence of internal cavities makes foot extremely cleanable.

Washers UNI 6592-69 - **Box quantity:** 24 pieces.

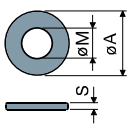

øM	M8	M10	M12	M14	M16
Smm	1,6	2	2,5	2,5	3
øAmm	17	21	24	28	30
Stainless steel codes	7637	7286	7287	7288	7291

Nuts UNI 5588-65 - **Box quantity:** 24 pieces.

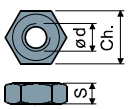

ød	M8	M10	M12	M14	M16
Smm	6,5	8	10	11	13
Ch. mm	13	17	19	22	24
Stainless steel codes	7635	7272	7273	7274	7277

On request
- **Spindles with:** Sunk hexagon head • second wrench seat head • hexagon wrench seat • threads with other pitches and lengths • stainless steel AISI 316.
- **Anti-slip pads:** White color.
- **Box quantity:** Not standard.
- **Assembling of:** Nuts • washers.

Articulated feet, sanitizable

(base in stainless steel)

Part. **107 ø 75**

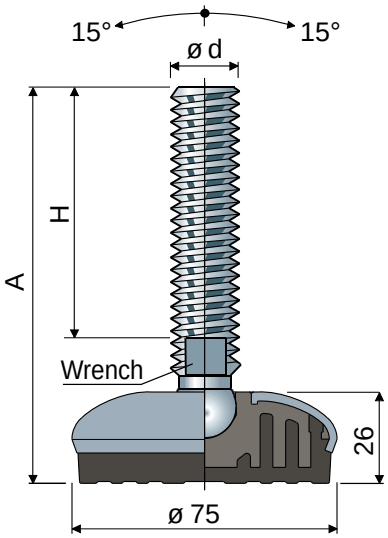

ød	Spindle measures in mm A	H	Wrench	Spindle and base in stainless steel AISI 304 Code	Max static load (N)
M16	103	60	13	**107 / 83524**	19000
	133	90	13	**107 / 83525**	
	148	105	13	**107 / 83526**	
	168	125	13	**107 / 83527**	
	198	155	13	**107 / 83528**	
	208	165	13	**107 / 83529**	
	248	205	13	**107 / 83530**	
M20	132	86	17	**107 / 83531**	21000
	162	116	17	**107 / 83532**	
	187	141	17	**107 / 83533**	
	252	206	17	**107 / 83534**	
M24	142	96	19	**107 / 83535**	23000
	168	122	19	**107 / 83536**	
	198	152	19	**107 / 83537**	
	228	182	19	**107 / 83538**	
	346	300	19	**107 / 83539**	

ød	Spindle measures in inches A	H	Wrench	Spindle and base in stainless steel AISI 304 Code	Max static load (N)
5/8"-11 UNC	8,70"	7"	1/2"	**107 / 83592**	19000
3/4"-10 UNC	8,78"	7"	5/8"	**107 / 83593**	21000

Material: Internal part made of reinforced polyamide; external covering made of stainless steel AISI 304; anti-slip pad made of thermoplastic rubber 68 Shore black colour.
Box quantity: 8 pieces.
Features: Comoulded anti-slip pad allows a perfect adherence with steel base. Consequent absence of internal cavities makes foot extremely cleanable.

Washers UNI 6592-69 - **Box quantity:** 24 pieces.

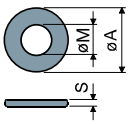

ø M	M16	M20	M24
S mm	3	3	4
ø A mm	30	37	44
Stainless steel codes	7291	7292	7294

Nuts UNI 5588-65 - **Box quantity:** 24 pieces.

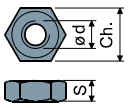

ø d	M16	M20	M24
S mm	13	16	19
Ch. mm	24	30	36
Stainless steel codes	7277	7278	7280

On request
- **Spindles with:** Sunk hexagon head • second wrench seat head • hexagon wrench seat • threads with other pitches and lengths • stainless steel AISI 316.
- **Anti-slip pads:** White color.
- **Box quantity:** Not standard.
- **Assembling of:** Nuts • washers.

Articulated feet, sanitizable

(base in stainless steel)

ø 95 Part. **101**

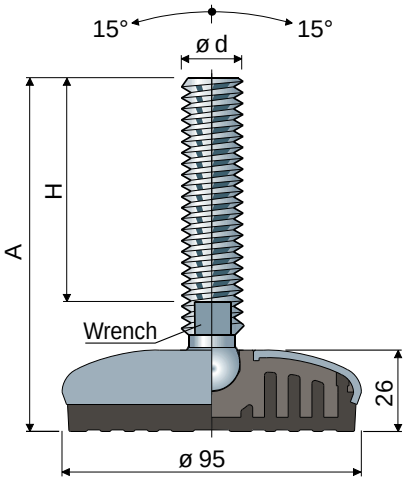

ød	Spindle measures in mm A	H	Wrench	Spindle and base in stainless steel AISI 304 Code	Max static load (N)
M16	103	60	13	**101 / 83073**	22000
	133	90	13	**101 / 83074**	
	148	105	13	**101 / 83075**	
	168	125	13	**101 / 83076**	
	198	155	13	**101 / 83077**	
	208	165	13	**101 / 83078**	
	248	205	13	**101 / 83263**	
M20	132	86	17	**101 / 83079**	24000
	162	116	17	**101 / 83209**	
	187	141	17	**101 / 83081**	
	252	206	17	**101 / 83082**	
M24	142	96	19	**101 / 83083**	26000
	168	122	19	**101 / 83084**	
	198	152	19	**101 / 83085**	
	228	182	19	**101 / 83086**	
	346	300	19	**101 / 83087**	

ød	Spindle measures in mm A	H	Wrench	Spindle and base in stainless steel AISI 304 Code	Max static load (N)
M24x2	184	138	19	**101 / 85499**	26000
	199	153	19	**101 / 85501**	
	257	211	19	**101 / 85503**	
	302	256	19	**101 / 85505**	

NEW

ød	Spindle measures in inches A	H	Wrench	Spindle and base in stainless steel AISI 304 Code	Max static load (N)
5/8"-11 UNC	8,70"	7"	1/2"	**101 / 83145**	22000
3/4"-10 UNC	8,78"	7"	5/8"	**101 / 83155**	24000

Material: Internal part made of reinforced polyamide; external covering made of stainless steel AISI 304; anti-slip pad made of thermoplastic rubber 68 Shore black colour.
Box quantity: 8 pieces.
Features: Comoulded anti-slip pad allows a perfect adherence with steel base. Consequent absence of internal cavities makes foot extremely cleanable.

Washers UNI 6592-69 - **Box quantity:** 24 pieces.

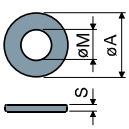

ø M	M16	M20	M24
S mm	3	3	4
ø A mm	30	37	44
Stainless steel codes	7291	7292	7294

Nuts UNI 5588-65 - **Box quantity:** 24 pieces.

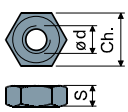

ø d	M16	M20	M24
S mm	13	16	19
Ch. mm	24	30	36
Stainless steel codes	7277	7278	7280

On request
- **Spindles with:** Sunk hexagon head • second wrench seat head • hexagon wrench seat • threads with other pitches and lengths • stainless steel AISI 316.
- **Anti-slip pads:** White color.
- **Box quantity:** Not standard.
- **Assembling of:** Nuts • washers.

Articulated feet, sanitizable with side fixing system

(base in stainless steel)

Part. **120 65x96**

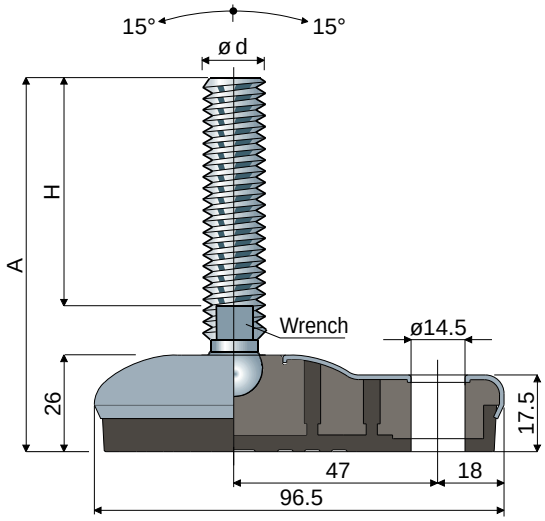

ød	Spindle measures in mm A	H	Wrench	Spindle and base in stainless steel AISI 304 Code	Max static load (N)
M8	80	45	6	**120 / 84837**	13000
	100	65	6	**120 / 84838**	
	142	107	6	**120 / 84839**	
M10	71	35	8	**120 / 84840**	14000
	107	70	8	**120 / 84841**	
	152	115	8	**120 / 84842**	
M12	82	43	10	**120 / 84843**	15000
	102	63	10	**120 / 84844**	
	116	77	10	**120 / 84845**	
	132	93	10	**120 / 84846**	
	162	123	10	**120 / 84847**	
M14	102	61	12	**120 / 84848**	16000
	132	91	12	**120 / 84849**	
	157	116	12	**120 / 84850**	
M16	103	60	13	**120 / 84851**	17000
	133	90	13	**120 / 84852**	
	148	105	13	**120 / 84853**	
	168	125	13	**120 / 84854**	
	198	155	13	**120 / 84855**	
	208	165	13	**120 / 84856**	
	248	205	13	**120 / 84857**	

ød	Spindle measures in inches A	H	Wrench	Spindle and base in stainless steel AISI 304 Code	Max static load (N)
1/2"-13 UNC	5,20"	3,64"	7/16"	**120 / 84862**	22000
5/8"-11 UNC	8,7"	7"	1/2"	**120 / 84863**	22000
3/4"-10 UNC	8,77"	7"	5/8"	**120 / 84864**	24000

Material: Internal part made of reinforced polyamide; external covering made of stainless steel AISI 304; anti-slip pad made of thermoplastic rubber 68 Shore black colour.

Box quantity: 8 pieces.

Features: Comoulded anti-slip pad allows a perfect adherence with steel base. Consequent absence of internal cavities makes foot extremely cleanable.

Washers UNI 6592-69 - **Box quantity:** 24 pieces.

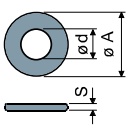

ø M	M8	M10	M12	M14	M16	M20
S mm	1,6	2	2,5	2,5	3	3
ø A mm	17	21	24	28	30	37
Zinc plated steel codes	7636	7283	7284	7285	7289	7290
Stainless steel codes	7637	7286	7287	7288	7291	7292

Nuts UNI 5588-65 - **Box quantity:** 24 pieces.

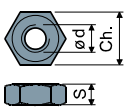

ø d	M8	M10	M12	M14	M16	M20
S mm	6,5	8	10	11	13	16
Ch. mm	13	17	19	22	24	30
Zinc plated steel codes	7634	7269	7270	7271	7275	7276
Stainless steel codes	7635	7272	7273	7274	7277	7278

On request

- **Spindles with:** Sunk hexagon head • second wrench seat head • hexagon wrench seat • threads with other pitches and lengths • stainless steel AISI 316.
- **Anti-slip pads:** White color.
- **Box quantity:** Not standard.
- **Assembling of:** Nuts • washers.

Articulated feet, sanitizable with side fixing system

(base in stainless steel)

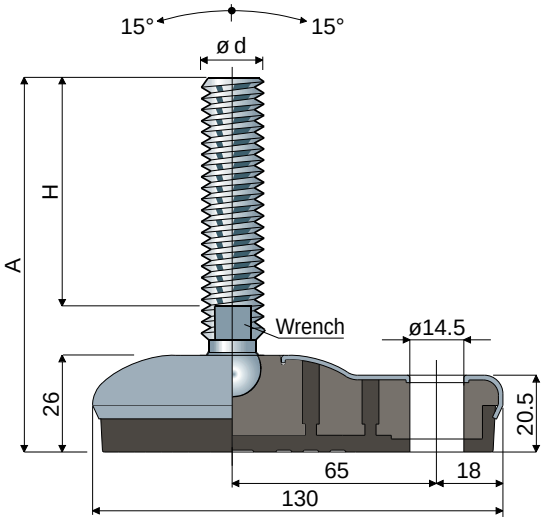

95x130 Part. **111**

ød	Spindle measures in mm A	H	Wrench	Spindle and base in stainless steel AISI 304 Code	Max static load (N)
M16	105	60	13	**111 / 83762**	22000
	135	90	13	**111 / 83763**	
	150	105	13	**111 / 83764**	
	170	125	13	**111 / 83765**	
	200	155	13	**111 / 83766**	
	210	165	13	**111 / 83767**	
	250	205	13	**111 / 83768**	
M20	134	86	17	**111 / 83769**	24000
	164	116	17	**111 / 83770**	
	189	141	17	**111 / 83771**	
	254	206	17	**111 / 83772**	
M24	143	96	19	**111 / 83773**	26000
	169	122	19	**111 / 83774**	
	199	152	19	**111 / 83775**	
	229	182	19	**111 / 83776**	
	347	300	19	**111 / 83777**	

ød	Spindle measures in mm A	H	Wrench	Spindle and base in stainless steel AISI 304 Code	Max static load (N)
M24x2	185	138	19	**111 / 85195**	26000
	200	153	19	**111 / 85196**	
	258	211	19	**111 / 85198**	
	303	256	19	**111 / 85199**	

NEW

ød	Spindle measures in inches A	H	Wrench	Spindle and base in stainless steel AISI 304 Code	Max static load (N)
5/8"-11 UNC	8,76"	7"	1/2"	**111 / 83778**	22000
3/4"-10 UNC	8,84"	7"	5/8"	**111 / 83779**	24000

Material: Internal part made of reinforced polyamide; external covering made of stainless steel AISI 304; anti-slip pad made of thermoplastic rubber 68 Shore black colour.

Box quantity: 8 pieces.

Features: Comoulded anti-slip pad allows a perfect adherence with steel base. Consequent absence of internal cavities makes foot extremely cleanable.

Washers UNI 6592-69 - **Box quantity:** 24 pieces.

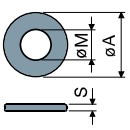

øM	M16	M20	M24
Smm	3	3	4
øAmm	30	37	44
Stainless steel codes	7291	7292	7294

Nuts UNI 5588-65 - **Box quantity:** 24 pieces.

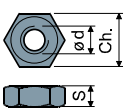

ø d	M16	M20	M24
Smm	13	16	19
Ch. mm	24	30	36
Stainless steel codes	7277	7278	7280

On request

- **Spindles with:** Sunk hexagon head • second wrench seat head • hexagon wrench seat • threads with other pitches and lengths • stainless steel AISI 316.
- **Anti-slip pads:** White color.
- **Box quantity:** Not standard.
- **Assembling of:** Nuts • washers.

Articulated feet, sanitizable

(base in stainless steel)

Part. 109 ø 120

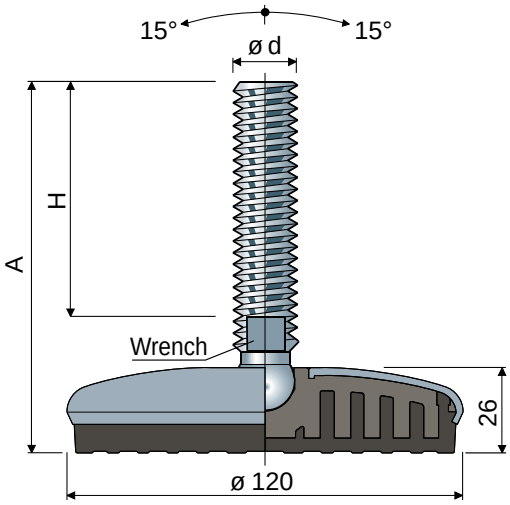

ød	Spindle measures in mm A	H	Wrench	Spindle and base in stainless steel AISI 304 Code	Max static load (N)
M16	103	60	13	**109 / 83558**	25000
	133	90	13	**109 / 83559**	
	148	105	13	**109 / 83560**	
	168	125	13	**109 / 83561**	
	198	155	13	**109 / 83562**	
	208	165	13	**109 / 83563**	
	248	205	13	**109 / 83564**	
M20	132	86	17	**109 / 83565**	27000
	162	116	17	**109 / 83566**	
	187	141	17	**109 / 83567**	
	252	206	17	**109 / 83568**	
M24	142	96	19	**109 / 83569**	29000
	168	122	19	**109 / 83570**	
	198	152	19	**109 / 83571**	
	228	182	19	**109 / 83572**	
	346	300	19	**109 / 83573**	

ød	Spindle measures in mm A	H	Wrench	Spindle and base in stainless steel AISI 304 Code	Max static load (N)
M24x2	184	138	19	**109 / 85515**	29000
	199	153	19	**109 / 85517**	
	257	211	19	**109 / 85519**	
	302	256	19	**109 / 85521**	

NEW

ød	Spindle measures in inches A	H	Wrench	Spindle and base in stainless steel AISI 304 Code	Max static load (N)
5/8"-11 UNC	8,70"	7"	1/2"	**109 / 83594**	25000
3/4"-10 UNC	8,78"	7"	5/8"	**109 / 83595**	27000

Material: Internal part made of reinforced polyamide; external covering made of stainless steel AISI 304; anti-slip pad made of thermoplastic rubber 68 Shore black colour.
Box quantity: 8 pieces.
Features: Comoulded anti-slip pad allows a perfect adherence with steel base. Consequent absence of internal cavities makes foot extremely cleanable.

Washers UNI 6592-69 - **Box quantity:** 24 pieces.

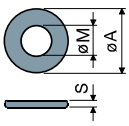

ø M	M16	M20	M24
S mm	3	3	4
ø A mm	30	37	44
Stainless steel codes	7291	7292	7294

Nuts UNI 5588-65 - **Box quantity:** 24 pieces.

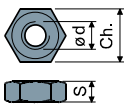

ø d	M16	M20	M24
S mm	13	16	19
Ch. mm	24	30	36
Stainless steel codes	7277	7278	7280

On request
- **Spindles with:** Sunk hexagon head • second wrench seat head • hexagon wrench seat • threads with other pitches and lengths • stainless steel AISI 316.
- **Anti-slip pads:** White color.
- **Box quantity:** Not standard.
- **Assembling of:** Nuts • washers.

Adjustable feet, sanitizable

(base in stainless steel)

ø 55 Part. 114

Type 1					
Spindle measures in mm					
ød	A	H	Wrench	Spindle and base in stainless steel AISI 304 Code	Max static load (N)
M12	110	70	10	**114 / 83802**	15000
M14	148	108	12	**114 / 83803**	
M16	102	58	13	**114 / 83804**	20000
	163	119	13	**114 / 83805**	
	189	145	13	**114 / 83806**	
	245	201	13	**114 / 83807**	
M18	201	156	15	**114 / 83808**	
M20	151	107	17	**114 / 83809**	
	179	135	17	**114 / 83810**	
	201	157	17	**114 / 83811**	
	234	190	17	**114 / 83812**	
	282	238	17	**114 / 83813**	
M24	139	90	13	**114 / 83814**	
	176	127	13	**114 / 83815**	
	211	162	13	**114 / 83816**	
	250	201	13	**114 / 83817**	
M30	174	125	13	**114 / 83818**	
	234	185	13	**114 / 83819**	

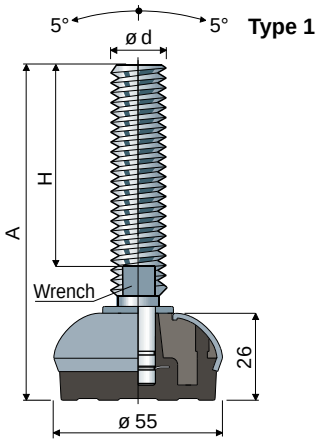

Material: Internal part made of reinforced polyamide; external covering made of stainless steel AISI 304; anti-slip pad made of thermoplastic rubber 68 Shore black colour.
Box quantity: 8 pieces.
Features: Comoulded anti-slip pad allows a perfect adherence with steel base. Consequent absence of internal cavities makes foot extremely cleanable.
The threaded insert guarantees the protection of the spindle thread.

Washers UNI 6592-69 - **Box quantity:** 24 pieces.

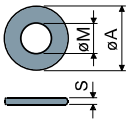

øM	M12	M14	M16	M20	M24	M30
Smm	2,5	2,5	3	3	4	4
øAmm	24	28	30	37	44	56
Stainless steel codes	7287	7288	7291	7292	7294	7296

Nuts UNI 5588-65 - **Box quantity:** 24 pieces.

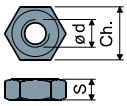

ød	M12	M14	M16	M20	M24	M30
Smm	10	11	13	16	19	24
Ch. mm	19	22	24	30	36	46
Stainless steel codes	7273	7274	7277	7278	7280	7282

On request
- **Spindles with:** Sunk hexagon head • second wrench seat head • hexagon wrench seat • threads with other pitches and lengths • stainless steel AISI 316.
- **Anti-slip pads:** White color.
- **Box quantity:** Not standard.
- **Assembling of:** Nuts • washers.

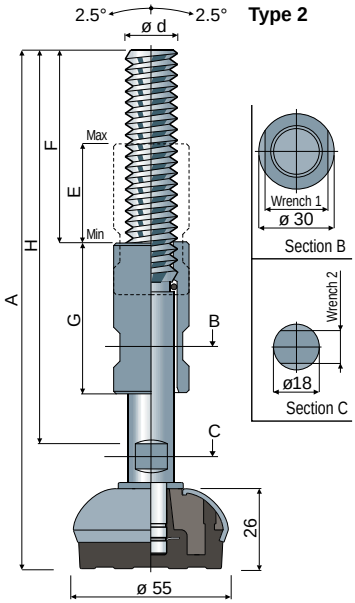

Type 2									
Spindle measures in mm									
ød	A	H	F	E	G	Wrench 1	Wrench 2	Spindle and base in stainless steel AISI 304 Code	Max static load (N)
M20	200	159	73	39	60	25	13	**114 / 85164**	20000
	260	220	100	78	100	25	13	**114 / 85165**	

Adjustable feet, sanitizable

(base in stainless steel)

Part. 108 ø 75

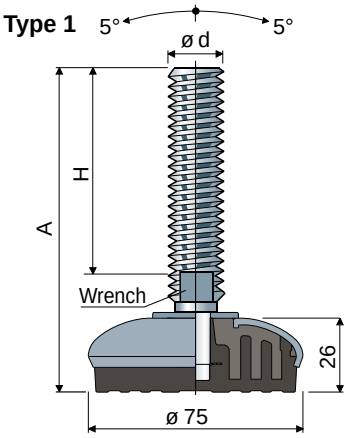

Type 1					
Spindle measures in mm					
ød	A	H	Wrench	Spindle and base in stainless steel AISI 304 Code	Max static load (N)
M12	109	70	10	**108 / 83540**	17000
M14	148	108	12	**108 / 83541**	24000
M16	102	58	13	**108 / 83542**	
	163	119	13	**108 / 83543**	
	189	145	13	**108 / 83544**	
	245	201	13	**108 / 83545**	
M18	201	157	15	**108 / 83546**	
M20	153	107	17	**108 / 83547**	
	181	135	17	**108 / 83548**	
	203	157	17	**108 / 83549**	
	236	190	17	**108 / 83550**	
	284	238	17	**108 / 83551**	
M24	139	90	19	**108 / 83552**	
	176	127	19	**108 / 83553**	
	211	162	19	**108 / 83554**	
	250	201	19	**108 / 83555**	
M30	174	125	24	**108 / 83556**	
	234	185	24	**108 / 83557**	

Material: Internal part made of reinforced polyamide; external covering made of stainless steel AISI 304; anti-slip pad made of thermoplastic rubber 68 Shore black colour.
Box quantity: 8 pieces.
Features: Comoulded anti-slip pad allows a perfect adherence with steel base. Consequent absence of internal cavities makes foot extremely cleanable.
The threaded insert guarantees the protection of the spindle thread.

Washers UNI 6592-69 - **Box quantity:** 24 pieces.

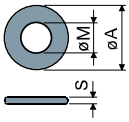

ø M	M12	M14	M16	M20	M24	M30
S mm	2,5	2,5	3	3	4	4
ø A mm	24	28	30	37	44	56
Stainless steel codes	7287	7288	7291	7292	7294	7296

Nuts UNI 5588-65 - **Box quantity:** 24 pieces.

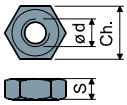

ø d	M12	M14	M16	M20	M24	M30
S mm	10	11	13	16	19	24
Ch. mm	19	22	24	30	36	46
Stainless steel codes	7273	7274	7277	7278	7280	7282

On request
- **Spindles with:** Sunk hexagon head • second wrench seat head • hexagon wrench seat • threads with other pitches and lengths • stainless steel AISI 316.
- **Anti-slip pads:** White color.
- **Box quantity:** Not standard.
- **Assembling of:** Nuts • washers.

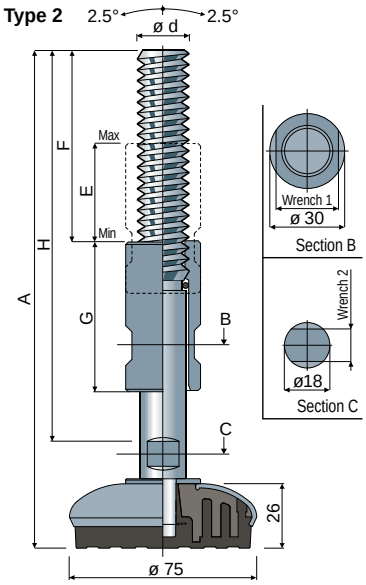

Type 2									
Spindle measures in mm									
ød	A	H	F	E	G	Wrench 1	Wrench 2	Spindle and base in stainless steel AISI 304 Code	Max static load (N)
M20	200	159	73	39	60	25	13	**108 / 84134**	24000
	260	220	100	78	100	25	13	**108 / 84190**	

Adjustable feet, sanitizable

(base in stainless steel)

ø 95 Part. 103

Type 1					
Spindle measures in mm					
ød	A	H	Wrench	Spindle and base in stainless steel AISI 304 Code	Max static load (N)
M12	109	70	10	**103 / 83043**	17000
M14	148	108	12	**103 / 83052**	27000
M16	102	58	13	**103 / 83053**	
	163	119	13	**103 / 83054**	
	189	145	13	**103 / 83055**	
	245	201	13	**103 / 83056**	
M18	201	157	15	**103 / 83057**	
M20	153	107	17	**103 / 83058**	
	181	135	17	**103 / 83059**	
	203	157	17	**103 / 83060**	
	236	190	17	**103 / 83061**	
	284	238	17	**103 / 83062**	
M24	139	90	19	**103 / 83063**	
	176	127	19	**103 / 83064**	
	211	162	19	**103 / 83065**	
	250	201	19	**103 / 83066**	
M30	174	125	24	**103 / 83067**	
	234	185	24	**103 / 83068**	

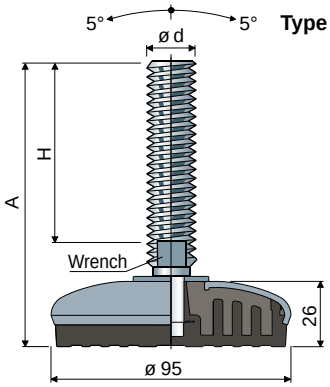

Material: Internal part made of reinforced polyamide; external covering made of stainless steel AISI 304; anti-slip pad made of thermoplastic rubber 68 Shore black colour.
Box quantity: 8 pieces.
Features: Comoulded anti-slip pad allows a perfect adherence with steel base. Consequent absence of internal cavities makes foot extremely cleanable.
The threaded insert guarantees the protection of the spindle thread.

Washers UNI 6592-69 - **Box quantity:** 24 pieces.

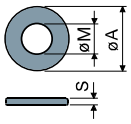

øM	M12	M14	M16	M20	M24	M30
Smm	2,5	2,5	3	3	4	4
øAmm	24	28	30	37	44	56
Stainless steel codes	7287	7288	7291	7292	7294	7296

Nuts UNI 5588-65 - **Box quantity:** 24 pieces.

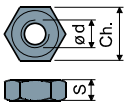

ø d	M12	M14	M16	M20	M24	M30
Smm	10	11	13	16	19	24
Ch. mm	19	22	24	30	36	46
Stainless steel codes	7273	7274	7277	7278	7280	7282

On request
- **Spindles with:** Sunk hexagon head • second wrench seat head • hexagon wrench seat • threads with other pitches and lengths • stainless steel AISI 316.
- **Anti-slip pads:** White color.
- **Box quantity:** Not standard.
- **Assembling of:** Nuts • washers.

Type 2									
Spindle measures in mm									
ød	A	H	F	E	G	Wrench 1	Wrench 2	Spindle and base in stainless steel AISI 304 Code	Max static load (N)
M20	200	159	73	39	60	25	13	**103 / 83465**	27000
	260	220	100	78	100	25	13	**103 / 84191**	

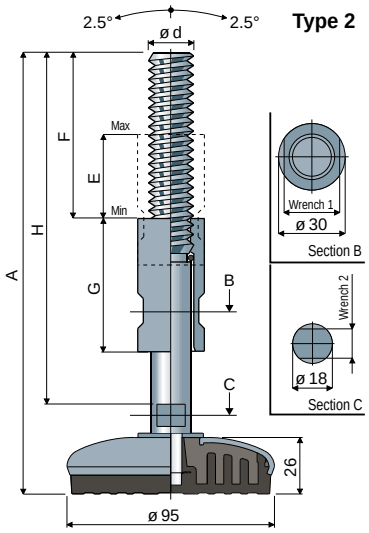

Adjustable feet, sanitizable with side fixing system

(base in stainless steel)

Part. 119 65x96

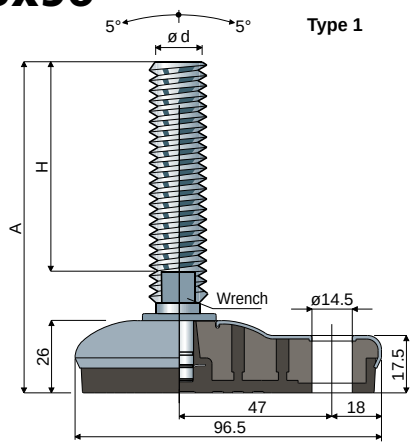

Type 1					
Spindle measures in mm					
ød	A	H	Wrench	Spindle and base in stainless steel AISI 304 Code	Max static load (N)
M12	110	70	10	**119 / 84819**	17000
M14	148	108	12	**119 / 84820**	22000
M16	102	58	13	**119 / 84821**	
	163	119	13	**119 / 84822**	
	189	145	13	**119 / 84823**	
	245	201	13	**119 / 84824**	
M18	201	157	15	**119 / 84825**	
M20	151	107	17	**119 / 84826**	
	179	135	17	**119 / 84827**	
	201	157	17	**119 / 84828**	
	234	190	17	**119 / 84829**	
	282	238	17	**119 / 84830**	

Material: Internal part made of reinforced polyamide; external covering made of stainless steel AISI 304; anti-slip pad made of thermoplastic rubber 68 Shore black colour.
Box quantity: 8 pieces.
Features: Comoulded anti-slip pad allows a perfect adherence with steel base. Consequent absence of internal cavities makes foot extremely cleanable.
The threaded insert guarantees the protection of the spindle thread.

Washers UNI 6592-69 - **Box quantity:** 24 pieces.

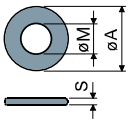

ø M	M12	M14	M16	M20	M24	M30
Smm	2,5	2,5	3	3	4	4
ø A mm	24	28	30	37	44	56
Stainless steel codes	7287	7288	7291	7292	7294	7296

Nuts UNI 5588-65 - **Box quantity:** 24 pieces.

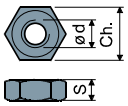

ø d	M12	M14	M16	M20	M24	M30
Smm	10	11	13	16	19	24
Ch. mm	19	22	24	30	36	46
Stainless steel codes	7273	7274	7277	7278	7280	7282

On request
- **Spindles with:** Sunk hexagon head • second wrench seat head • hexagon wrench seat • threads with other pitches and lengths • stainless steel AISI 316.
- **Anti-slip pads:** White color.
- **Box quantity:** Not standard.
- **Assembling of:** Nuts • washers.

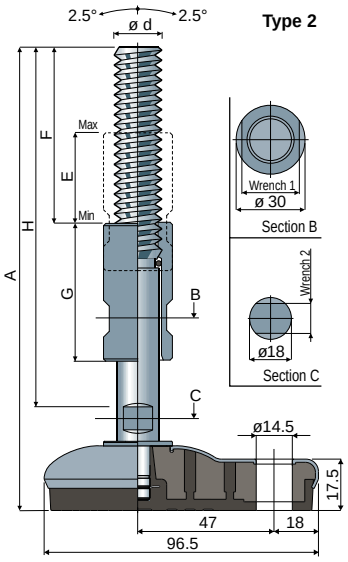

Type 2									
Spindle measures in mm									
ød	A	H	F	E	G	Wrench 1	Wrench 2	Spindle and base in stainless steel AISI 304 Code	Max static load (N)
M20	200	159	73	39	60	25	13	**119 / 85088**	22000
	260	220	100	78	100	25	13	**119 / 85089**	

Adjustable feet, sanitizable with side fixing system

(base in stainless steel)

95x130 Part. **112**

Type 1					
Spindle measures in mm					
ød	A	H	Wrench	Spindle and base in stainless steel AISI 304 Code	Max static load (N)
M12	111	70	10	**112 / 83744**	17000
M14	150	108	12	**112 / 83745**	
M16	103	58	13	**112 / 83746**	
	164	119	13	**112 / 83747**	
	190	145	13	**112 / 83748**	
	246	201	13	**112 / 83749**	
M18	203	157	15	**112 / 83750**	
M20	154	107	17	**112 / 83751**	
	182	135	17	**112 / 83752**	
	204	157	17	**112 / 83753**	27000
	237	190	17	**112 / 83754**	
	285	238	17	**112 / 83755**	
M24	141	90	19	**112 / 83756**	
	178	127	19	**112 / 83757**	
	213	162	19	**112 / 83758**	
	252	201	19	**112 / 83759**	
M30	176	125	24	**112 / 83760**	
	236	185	24	**112 / 83761**	

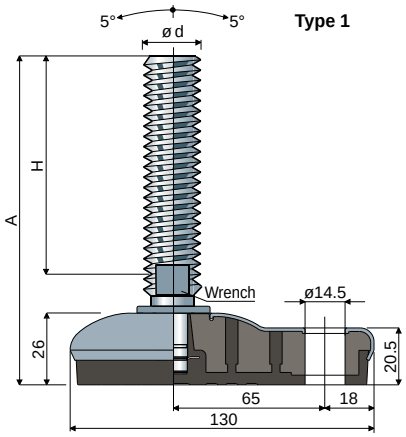

Material: Internal part made of reinforced polyamide; external covering made of stainless steel AISI 304; anti-slip pad made of thermoplastic rubber 68 Shore black colour.
Box quantity: 8 pieces.
Features: Comoulded anti-slip pad allows a perfect adherence with steel base. Consequent absence of internal cavities makes foot extremely cleanable.
The threaded insert guarantees the protection of the spindle thread.

Washers UNI 6592-69 - **Box quantity:** 24 pieces.

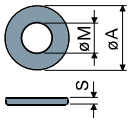

øM	M12	M14	M16	M20	M24	M30
Smm	2,5	2,5	3	3	4	4
øAmm	24	28	30	37	44	56
Stainless steel codes	7287	7288	7291	7292	7294	7296

Nuts UNI 5588-65 - **Box quantity:** 24 pieces.

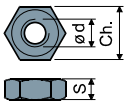

ø d	M12	M14	M16	M20	M24	M30
Smm	10	11	13	16	19	24
Ch. mm	19	22	24	30	36	46
Stainless steel codes	7273	7274	7277	7278	7280	7282

On request
- **Spindles with:** Sunk hexagon head • second wrench seat head • hexagon wrench seat • threads with other pitches and lengths • stainless steel AISI 316.
- **Anti-slip pads:** White color.
- **Box quantity:** Not standard.
- **Assembling of:** Nuts • washers.

Type 2									
Spindle measures in mm									
ød	A	H	F	E	G	Wrench 1	Wrench 2	Spindle and base in stainless steel AISI 304 Code	Max static load (N)
M20	200	159	73	39	60	25	13	**112 / 84135**	27000
	260	220	100	78	100	25	13	**112 / 84193**	

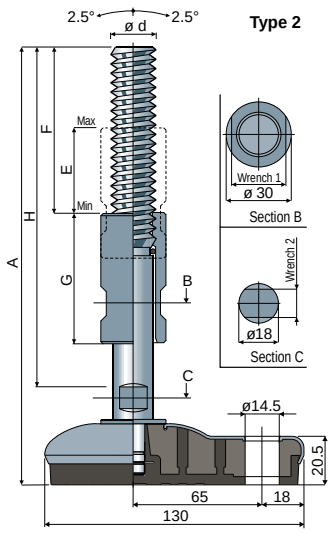

Adjustable feet, sanitizable

(base in stainless steel)

Part. **110 ø 120**

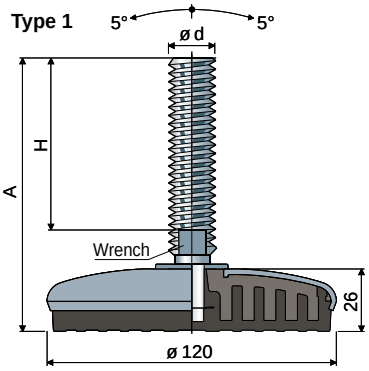

Type 1					
Spindle measures in mm					
ød	A	H	Wrench	Spindle and base in stainless steel AISI 304 Code	Max static load (N)
M12	109	70	10	**110 / 83574**	17000
M14	148	108	12	**110 / 83575**	
M16	102	58	13	**110 / 83576**	
	163	119	13	**110 / 83577**	
	189	145	13	**110 / 83578**	
	245	201	13	**110 / 83579**	
M18	201	157	15	**110 / 83580**	
M20	153	107	17	**110 / 83581**	
	181	135	17	**110 / 83582**	
	203	157	17	**110 / 83583**	30000
	236	190	17	**110 / 83584**	
	284	238	17	**110 / 83585**	
M24	139	90	19	**110 / 83586**	
	176	127	19	**110 / 83587**	
	211	162	19	**110 / 83588**	
	250	201	19	**110 / 83589**	
M30	174	125	24	**110 / 83590**	
	234	185	24	**110 / 83591**	

Material: Internal part made of reinforced polyamide; external covering made of stainless steel AISI 304; anti-slip pad made of thermoplastic rubber 68 Shore black colour.
Box quantity: 8 pieces.
Features: Comoulded anti-slip pad allows a perfect adherence with steel base. Consequent absence of internal cavities makes foot extremely cleanable.
The threaded insert guarantees the protection of the spindle thread.

Washers UNI 6592-69 - **Box quantity:** 24 pieces.

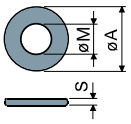

ø M	M12	M14	M16	M20	M24	M30
Smm	2,5	2,5	3	3	4	4
ø A mm	24	28	30	37	44	56
Stainless steel codes	7287	7288	7291	7292	7294	7296

Nuts UNI 5588-65 - **Box quantity:** 24 pieces.

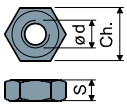

ø d	M12	M14	M16	M20	M24	M30
Smm	10	11	13	16	19	24
Ch. mm	19	22	24	30	36	46
Stainless steel codes	7273	7274	7277	7278	7280	7282

On request
- **Spindles with:** Sunk hexagon head • second wrench seat head • hexagon wrench seat • threads with other pitches and lengths • stainless steel AISI 316.
- **Anti-slip pads:** White color.
- **Box quantity:** Not standard.
- **Assembling of:** Nuts • washers.

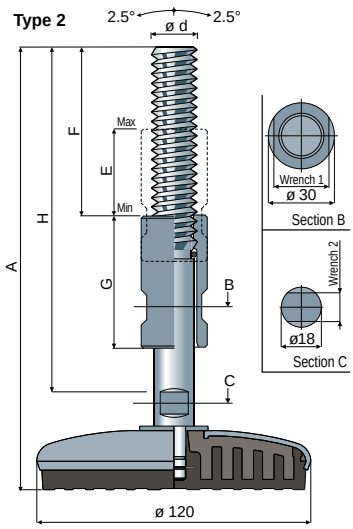

Type 2									
Spindle measures in mm									
ød	A	H	F	E	G	Wrench 1	Wrench 2	Spindle and base in stainless steel AISI 304 Code	Max static load (N)
M20	200	159	73	39	60	25	13	**110 / 84136**	30000
	260	220	100	78	100	25	13	**110 / 84195**	

Threaded bushings

(for rectangular tubes)

Part. **82**

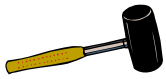

Pressure fitted

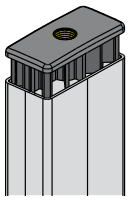

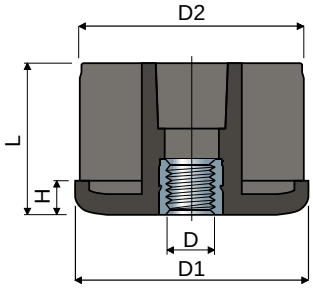

Tube dimensions								Code	Max
Outside	Thickness	Inside	Thread	D1	D2	H	L		static load
(mm)	(mm)	(mm)	D	(mm)	(mm)	(mm)	(mm)		(N)
20x50	2	16x46	M8	20x50	16x46	5	38	**82 / 80325**	4500
30x60	2,5	25x55	M8	30x60	25x55	8	38	**82 / 82173**	4500
			M10	30x60	25x55	8	38	**82 / 82175**	5000
			M12	30x60	25x55	8	38	**82 / 82176**	5500
			M14	30x60	25x55	8	38	**82 / 82177**	6000
			M16	30x60	25x55	8	38	**82 / 82174**	6500
40x60	2	36x56	M14	40x60	36x56	10	45	**82 / 85141**	8500
			M16	40x60	36x56	10	45	**82 / 84309**	9000
			M20	40x60	36x56	10	45	**82 / 84311**	9500
40x80	2	36x76	M14	40x80	36x76	10	45	**82 / 82180**	8500
			M16	40x80	36x76	10	45	**82 / 80326**	9000
			M20	40x80	36x76	10	45	**82 / 80327**	9500
	3	34x74	M14	40x80	34x74	10	45	**82 / 82590**	8500
			M16	40x80	34x74	10	45	**82 / 82516**	9000
			M20	40x80	34x74	10	45	**82 / 82591**	9500
50x100	2	46x96	M14	50x100	46x96	10	45	**82 / 82181**	8500
			M16	50x100	46x96	10	45	**82 / 80693**	9000
			M20	50x100	46x96	10	45	**82 / 80694**	9500
	3	44x94	M14	50x100	44x94	10	45	**82 / 82182**	9000
			M16	50x100	44x94	10	45	**82 / 82178**	9500
			M20	50x100	44x94	10	45	**82 / 82179**	10000
50x150	3	44x144	M14	50x150	44x144	10	45	**82 / 82183**	9000
			M16	50x150	44x144	10	45	**82 / 80211**	9500
			M20	50x150	44x144	10	45	**82 / 80212**	10000
60x120	3	54x114	M14	60x120	54x114	10	45	**82 / 82184**	9000
			M16	60x120	54x114	10	45	**82 / 80209**	9500
			M20	60x120	54x114	10	45	**82 / 80210**	10000

Material: Bush in reinforced polyamide black colour; threaded insert in brass.
Box quantity: 24 pieces.

On request

- **Bushes:** Can be supplied with thread in inches (1/4”-20, 5/16”-18, 3/8”-16, 1/2”-13, 5/8”-11, 3/4”-10, 1”-8, etc.); With different thicknesses and colours.
- **Threaded insert:** In nickel plated brass.
- **Box quantity:** According to your request.

Threaded bushings

(for round tubes)

Part. **64**

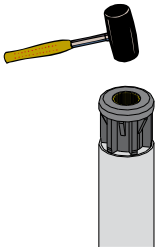

Pressure fitted

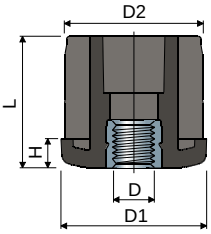

Tube dimensions									Code	Max
Outside ø		Thickness	Inside ø	Thread	D1	D2	H	L		static load
(mm)	(inches)	(mm)	(mm)	D	(mm)	(mm)	(mm)	(mm)		(N)
20	-	2	16	M8	20	16	5	23	**64 / 83916**	4500
25	-	2	21	M8	25	21	5	25	**64 / 83917**	4500
				M10	25	21	6	26	**64 / 83918**	5000
				M12	25	21	6	26	**64 / 85142**	5500
30	-	1	28	M8	30	28	6	31	**64 / 7802**	4500
				M10	30	28	6	31	**64 / 7803**	5000
				M12	30	28	6	31	**64 / 7804**	5500
				M14	30	28	6	31	**64 / 7805**	6000
				M16	30	28	6	31	**64 / 7806**	6500
	-	1,5	27	M8	30	27	6	31	**64 / 80857**	4500
				M10	30	27	6	31	**64 / 80858**	5000
				M12	30	27	6	31	**64 / 80859**	5500
				M14	30	27	6	31	**64 / 80860**	6000
				M16	30	27	6	31	**64 / 80861**	6500
	-	2	26	M8	30	26	6	31	**64 / 80862**	4500
				M10	30	26	6	31	**64 / 80863**	5000
				M12	30	26	6	31	**64 / 80864**	5500
				M14	30	26	6	31	**64 / 80865**	6000
				M16	30	26	6	31	**64 / 80866**	6500
	-	2,5	25	M8	30	25	6	31	**64 / 80867**	4500
				M10	30	25	6	31	**64 / 80868**	5000
				M12	30	25	6	31	**64 / 80869**	5500
				M14	30	25	6	31	**64 / 80870**	6000
				M16	30	25	6	31	**64 / 80871**	6500
32	-	2	28	M8	32	28	6	31	**64 / 83919**	4500
				M10	32	28	6	31	**64 / 83920**	5000
				M12	32	28	6	31	**64 / 85143**	5500
35	-	2	31	M8	35	31	6	31	**64 / 85144**	4500
				M10	35	31	6	31	**64 / 83921**	5000
				M12	35	31	6	31	**64 / 83922**	5500
38	-	1,5	35	M8	38	35	8	38	**64 / 7882**	4500
				M10	38	35	8	38	**64 / 7210**	5000
				M12	38	35	8	38	**64 / 7211**	5500
				M14	38	35	8	38	**64 / 7212**	6000
				M16	38	35	8	38	**64 / 7213**	6500
	-	2	34	M8	38	34	8	38	**64 / 81015**	4500
				M10	38	34	8	38	**64 / 81016**	5000
				M12	38	34	8	38	**64 / 80873**	5500
				M14	38	34	8	38	**64 / 80874**	6000
				M16	38	34	8	38	**64 / 80875**	6500
	-	2,5	33	M8	38	34	8	38	**64 / 82083**	4500
				M10	38	34	8	38	**64 / 80876**	5000
				M12	38	34	8	38	**64 / 80877**	5500
				M14	38	34	8	38	**64 / 80878**	6000
				M16	38	34	8	38	**64 / 80879**	6500
40	-	3	34	M8	40	34	8	38	**64 / 85145**	4500
				M10	40	34	8	38	**64 / 83923**	5000
				M12	40	34	8	38	**64 / 83924**	5500
42	-	3	36	M8	42	36	8	38	**64 / 85146**	5000
				M10	42	36	8	38	**64 / 83934**	5000
				M12	42	36	8	38	**64 / 83911**	5500
42,4	11/4	1,5	39,4	M8	42,4	39,4	8	38	**64 / 7883**	6500
				M10	42,4	39,4	8	38	**64 / 7214**	7000
				M12	42,4	39,4	8	38	**64 / 7215**	7500
				M14	42,4	39,4	8	38	**64 / 7216**	8000
				M16	42,4	39,4	8	38	**64 / 7217**	8500
				M20	42,4	39,4	8	38	**64 / 7218**	9000
		2	38,4	M8	42,4	38,4	8	38	**64 / 81017**	6500
				M10	42,4	38,4	8	38	**64 / 80880**	7000
				M12	42,4	38,4	8	38	**64 / 80881**	7500
				M14	42,4	38,4	8	38	**64 / 80882**	8000
				M16	42,4	38,4	8	38	**64 / 80883**	8500
				M20	42,4	38,4	8	38	**64 / 80884**	9000
		2,5	37,4	M8	42,4	37,4	8	38	**64 / 82084**	6500
				M10	42,4	37,4	8	38	**64 / 80885**	7000
				M12	42,4	37,4	8	38	**64 / 80886**	7500
				M14	42,4	37,4	8	38	**64 / 80887**	8000
				M16	42,4	37,4	8	38	**64 / 80888**	8500
				M20	42,4	37,4	8	38	**64 / 80889**	9000
45	-	3	39	M8	45	39	8	38	**64 / 85147**	6500
				M10	45	39	8	38	**64 / 85148**	7000
				M12	45	39	8	38	**64 / 83925**	7500
				M14	45	39	8	38	**64 / 85149**	8000
				M16	45	39	8	38	**64 / 83926**	8500

Threaded bushings

(for round tubes)

Tube dimensions										
Outside ø		Thickness	Inside ø	Thread	D1	D2	H	L	Code	Max static load
(mm)	(inches)	(mm)	(mm)	D	(mm)	(mm)	(mm)	(mm)		(N)
48	-	3	42	M8	48	42	10	45	**64 / 85150**	7000
				M10	48	42	10	45	**64 / 85151**	7500
				M12	48	42	10	45	**64 / 83912**	8000
				M14	48	42	10	45	**64 / 85152**	8500
				M16	48	42	10	45	**64 / 83913**	9000
48,3	11/2	1,5	45,3	M8	48,3	45,3	10	45	**64 / 7930**	7000
				M10	48,3	45,3	10	45	**64 / 7614**	7500
				M12	48,3	45,3	10	45	**64 / 7219**	8000
				M14	48,3	45,3	10	45	**64 / 7220**	8500
				M16	48,3	45,3	10	45	**64 / 7221**	9000
				M20	48,3	45,3	10	45	**64 / 7222**	9500
		2	44,3	M8	48,3	44,3	10	45	**64 / 81018**	7000
				M10	48,3	44,3	10	45	**64 / 81019**	7500
				M12	48,3	44,3	10	45	**64 / 80890**	8000
				M14	48,3	44,3	10	45	**64 / 80891**	8500
				M16	48,3	44,3	10	45	**64 / 80892**	9000
				M20	48,3	44,3	10	45	**64 / 80893**	9500
		2,5	43,3	M8	48,3	43,3	10	45	**64 / 81020**	7000
				M10	48,3	43,3	10	45	**64 / 81021**	7500
				M12	48,3	43,3	10	45	**64 / 80894**	8000
				M14	48,3	43,3	10	45	**64 / 80895**	8500
				M16	48,3	43,3	10	45	**64 / 80896**	9000
				M20	48,3	43,3	10	45	**64 / 80897**	9500
50	-	1,5	47	M8	50	47	10	45	**64 / 81022**	7000
				M10	50	47	10	45	**64 / 81023**	7500
				M12	50	47	10	45	**64 / 81024**	8000
				M14	50	47	10	45	**64 / 81025**	8500
				M16	50	47	10	45	**64 / 81026**	9000
				M20	50	47	10	45	**64 / 80953**	9500
		3	44	M8	50	44	10	45	**64 / 85153**	7000
				M10	50	44	10	45	**64 / 85154**	7500
				M12	50	44	10	45	**64 / 83914**	8000
				M14	50	44	10	45	**64 / 85155**	8500
				M16	50	44	10	45	**64 / 83915**	9000
				M20	50	44	10	45	**64 / 85156**	9500
50,9	-	1,5	47,9	M8	50,9	47,9	10	45	**64 / 81027**	7000
				M10	50,9	47,9	10	45	**64 / 81028**	7500
				M12	50,9	47,9	10	45	**64 / 80898**	8000
				M14	50,9	47,9	10	45	**64 / 80899**	8500
				M16	50,9	47,9	10	45	**64 / 80900**	9000
				M20	50,9	47,9	10	45	**64 / 80901**	9500
	-	2	46,9	M8	50,9	46,9	10	45	**64 / 81029**	7000
				M10	50,9	46,9	10	45	**64 / 81030**	7500
				M12	50,9	46,9	10	45	**64 / 80902**	8000
				M14	50,9	46,9	10	45	**64 / 80903**	8500
				M16	50,9	46,9	10	45	**64 / 80904**	9000
				M20	50,9	46,9	10	45	**64 / 80905**	9500
	-	2,5	45,9	M8	50,9	45,9	10	45	**64 / 82085**	7000
				M10	50,9	45,9	10	45	**64 / 82086**	7500
				M12	50,9	45,9	10	45	**64 / 80906**	8000
				M14	50,9	45,9	10	45	**64 / 80907**	8500
				M16	50,9	45,9	10	45	**64 / 80908**	9000
				M20	50,9	45,9	10	45	**64 / 80909**	9500
60,3	2	1,5	57,3	M8	60,3	57,3	12	52	**64 / 7932**	7000
				M10	60,3	57,3	12	52	**64 / 7615**	7500
				M12	60,3	57,3	12	52	**64 / 7616**	8000
				M14	60,3	57,3	12	52	**64 / 7617**	8500
				M16	60,3	57,3	12	52	**64 / 7223**	9000
				M20	60,3	57,3	12	52	**64 / 7224**	9500
				M24	60,3	57,3	12	52	**64 / 7225**	10000
		2	56,3	M8	60,3	56,3	12	52	**64 / 7934**	7000
				M10	60,3	56,3	12	52	**64 / 7618**	7500
				M12	60,3	56,3	12	52	**64 / 7619**	8000
				M14	60,3	56,3	12	52	**64 / 7620**	8500
				M16	60,3	56,3	12	52	**64 / 7226**	9000
				M20	60,3	56,3	12	52	**64 / 7227**	9500
				M24	60,3	56,3	12	52	**64 / 7228**	10000
		2,5	55,3	M8	60,3	55,3	12	52	**64 / 7935**	7000
				M10	60,3	55,3	12	52	**64 / 7621**	7500
				M12	60,3	55,3	12	52	**64 / 7622**	8000
				M14	60,3	55,3	12	52	**64 / 7623**	8500
				M16	60,3	55,3	12	52	**64 / 7229**	9000
				M20	60,3	55,3	12	52	**64 / 7230**	9500
				M24	60,3	55,3	12	52	**64 / 7231**	10000

Material: Bush in reinforced polyamide black colour; threaded insert in brass.
Box quantity: 24 pieces.

On request

- **Bushes:** With different thicknesses and colours.
- **Threaded insert:** In nickel plated brass.
- **Box quantity:** According to your request.

Threaded bushings

(for round tubes: sizes and threads in Inches)

Part. **64**

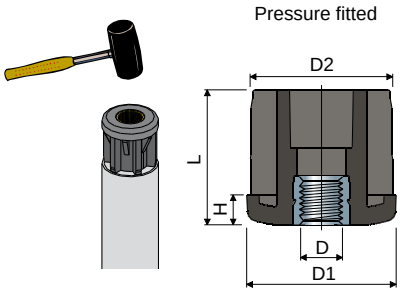

Tube dimensions											Code	Max static load
Outside ø		Thickness		Inside ø	Thread D		D1	D2	H	L		
(inches)	(mm)	(inches)	(mm)	(mm)	(UNC)	(mm)	(mm)	(mm)	(mm)	(mm)		(N)
1”	(25,4)	0,083”	(2,1)	21,18	1/4”-20	(6,35)	25,2	21,18	6	26	**64 / 82730**	4500
					5/16”-18	(7,93)	25,2	21,18	6	26	**64 / 82731**	4500
1”1/4	(31,75)	0,083”	(2,1)	27,53	3/8”-16	(9,52)	31,5	27,53	6	31	**64 / 82732**	5000
					1/2”-13	(12,7)	31,5	27,53	6	31	**64 / 82733**	5000
					5/8”-11	(15,87)	31,5	27,53	6	31	**64 / 82734**	6500
1”1/2	(38,1)	0,065”	(1,65)	34,8	3/8”-16	(9,52)	38	34,8	8	38	**64 / 82695**	5000
					1/2”-13	(12,7)	38	34,8	8	38	**64 / 82696**	5000
					5/8”-11	(15,87)	38	34,8	8	38	**64 / 82697**	6500
					3/4”-10	(19,05)	38	34,8	8	38	**64 / 82698**	9000
		0,083”	(2,1)	33,89	3/8”-16	(9,52)	38	33,89	8	38	**64 / 82735**	5000
					1/2”-13	(12,7)	38	33,89	8	38	**64 / 82736**	5000
					5/8”-11	(15,87)	38	33,89	8	38	**64 / 82737**	6500
					3/4”-10	(19,05)	38	33,89	8	38	**64 / 82738**	9000
1”3/4	(44,45)	0,12”	(3,04)	38,35	5/8”-11	(15,87)	44,2	38,35	8	38	**64 / 82740**	6500
					3/4”-10	(19,05)	44,2	38,35	8	38	**64 / 82741**	9000
					1”-8	(25,4)	44,2	38,35	8	38	**64 / 82739**	10000
2”	(50,8)	0,065”	(1,65)	47,5	3/8”-16	(9,52)	50,6	47,5	10	45	**64 / 82703**	5000
					1/2”-13	(12,7)	50,6	47,5	10	45	**64 / 82704**	5000
					5/8”-11	(15,87)	50,6	47,5	10	45	**64 / 82705**	6500
					3/4”-10	(19,05)	50,6	47,5	10	45	**64 / 82706**	9000
		0,109”	(2,77)	45,26	3/8”-16	(9,52)	50,6	45,26	10	45	**64 / 82699**	5000
					1/2”-13	(12,7)	50,6	45,26	10	45	**64 / 82700**	5000
					5/8”-11	(15,87)	50,6	45,26	10	45	**64 / 82701**	6500
					3/4”-10	(19,05)	50,6	45,26	10	45	**64 / 82702**	9000
		0,156”	(3,96)	42,88	5/8”-11	(15,87)	50,6	42,88	10	45	**64 / 82742**	6500
					3/4”-10	(19,05)	50,6	42,88	10	45	**64 / 82743**	9000
					1”-8	(25,4)	50,6	42,88	10	45	**64 / 82744**	10000
2”1/2	(63,5)	0,156”	(3,96)	55,58	5/8”-11	(15,87)	63,3	55,58	12	52	**64 / 82745**	6500
					3/4”-10	(19,05)	63,3	55,58	12	53	**64 / 82746**	9000
					1”-8	(25,4)	63,3	55,58	12	52	**64 / 82747**	10000

Material: Bush in reinforced polyamide black colour; threaded insert in brass.
Box quantity: 24 pieces.

On request
- **Bushes:** With different thicknesses and colours.
- **Threaded insert:** In nickel plated brass.
- **Box quantity:** According to your request.

Threaded bushings

(for square tubes)

Part. **68**

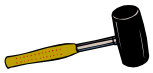

Pressure fitted

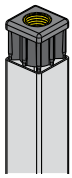

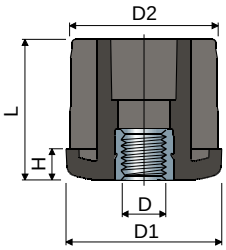

Tube dimensions								Code	Max
Outside	Thickness	Inside	Thread	D1	D2	H	L		static load
(mm)	(mm)	(mm)	D	(mm)	(mm)	(mm)	(mm)		(N)
20	1,5	17	M8	20	17	5	23	**68 / 7758**	4500
	2	16	M8	20	16	5	23	**68 / 83927**	4500
25	1,5	22	M8	25	22	6	26	**68 / 7807**	4500
			M10	25	22	6	26	**68 / 7808**	5000
			M12	25	22	6	26	**68 / 7809**	5500
	2	21	M8	25	21	6	26	**68 / 83928**	4500
			M10	25	21	6	26	**68 / 83929**	5000
			M12	25	21	6	26	**68 / 85157**	5500
30	1,5	27	M8	30	27	6	31	**68 / 7936**	4500
			M10	30	27	6	31	**68 / 7232**	5000
			M12	30	27	6	31	**68 / 7233**	5500
			M14	30	27	6	31	**68 / 7234**	6000
			M16	30	27	6	31	**68 / 7235**	6500
	2	26	M8	30	26	6	31	**68 / 81031**	4500
			M10	30	26	6	31	**68 / 7817**	5000
			M12	30	26	6	31	**68 / 7818**	5500
			M14	30	26	6	31	**68 / 80913**	6000
			M16	30	26	6	31	**68 / 80914**	6500
35	1,5	32	M8	35	32	8	38	**68 / 7937**	6500
			M10	35	32	8	38	**68 / 7236**	7000
			M12	35	32	8	38	**68 / 7237**	7500
			M14	35	32	8	38	**68 / 7238**	8000
			M16	35	32	8	38	**68 / 7239**	8500
			M20	35	32	8	38	**68 / 7240**	9000
	2	31	M8	35	31	8	38	**68 / 80163**	6500
			M10	35	31	8	38	**68 / 80036**	7000
			M12	35	31	8	38	**68 / 80164**	7500
			M14	35	31	8	38	**68 / 80165**	8000
			M16	35	31	8	38	**68 / 80172**	8500
			M20	35	31	8	38	**68 / 80173**	9000
40	1,2	37,6	M8	40	37,6	8	38	**68 / 80714**	7000
			M10	40	37,6	8	38	**68 / 80715**	7500
			M12	40	37,6	8	38	**68 / 80716**	8000
			M14	40	37,6	8	38	**68 / 80717**	8500
			M16	40	37,6	8	38	**68 / 80546**	9000
			M20	40	37,6	8	38	**68 / 80718**	9500
	1,5	37	M8	40	37	8	38	**68 / 7938**	7000
			M10	40	37	8	38	**68 / 7241**	7500
			M12	40	37	8	38	**68 / 7242**	8000
			M14	40	37	8	38	**68 / 7243**	8500
			M16	40	37	8	38	**68 / 7244**	9000
			M20	40	37	8	38	**68 / 7245**	9500
	2	36	M8	40	36	8	38	**68 / 7939**	7000
			M10	40	36	8	38	**68 / 7246**	7500
			M12	40	36	8	38	**68 / 7247**	8000
			M14	40	36	8	38	**68 / 7248**	8500
			M16	40	36	8	38	**68 / 7249**	9000
			M20	40	36	8	38	**68 / 7250**	9500
	2,5	35	M8	40	35	8	38	**68 / 80915**	7000
			M10	40	35	8	38	**68 / 80916**	7500
			M12	40	35	8	38	**68 / 80917**	8000
			M14	40	35	8	38	**68 / 80918**	8500
			M16	40	35	8	38	**68 / 80919**	9000
			M20	40	35	8	38	**68 / 80920**	9500

Threaded bushings

(for square tubes)

Part. **68**

Tube dimensions Outside (mm)	Thickness (mm)	Inside (mm)	Thread D	D1 (mm)	D2 (mm)	H (mm)	L (mm)	Code	Max static load (N)
40	3	34	M8	40	34	8	38	**68 / 85158**	7000
			M10	40	34	8	38	**68 / 83930**	7500
			M12	40	34	8	38	**68 / 83931**	8000
			M14	40	34	8	38	**68 / 85090**	8500
			M16	40	34	8	38	**68 / 85091**	9000
			M20	40	34	8	38	**68 / 85092**	9500
45	2	41	M8	45	41	8	38	**68 / 82118**	7000
			M10	45	41	8	38	**68 / 82119**	7500
			M12	45	41	8	38	**68 / 82120**	8000
			M14	45	41	8	38	**68 / 82121**	8500
			M16	45	41	8	38	**68 / 82122**	9000
			M20	45	41	8	38	**68 / 82123**	9500
	3	39	M8	45	39	8	38	**68 / 85159**	7000
			M10	45	39	8	38	**68 / 85160**	7500
			M12	45	39	8	38	**68 / 83932**	8000
			M14	45	39	8	38	**68 / 85161**	8500
			M16	45	39	8	38	**68 / 83933**	9000
			M20	45	39	8	38	**68 / 85162**	9500
50	1,2	47,6	M8	50	47,6	10	45	**68 / 80921**	7000
			M10	50	47,6	10	45	**68 / 80922**	7500
			M12	50	47,6	10	45	**68 / 80923**	8000
			M14	50	47,6	10	45	**68 / 80924**	8500
			M16	50	47,6	10	45	**68 / 80925**	9000
			M20	50	47,6	10	45	**68 / 80926**	9500
	1,5	47	M8	50	47	10	45	**68 / 7940**	7000
			M10	50	47	10	45	**68 / 7624**	7500
			M12	50	47	10	45	**68 / 7251**	8000
			M14	50	47	10	45	**68 / 7252**	8500
			M16	50	47	10	45	**68 / 7253**	9000
			M20	50	47	10	45	**68 / 7254**	9500
	2	46	M8	50	46	10	45	**68 / 7941**	7000
			M10	50	46	10	45	**68 / 7625**	7500
			M12	50	46	10	45	**68 / 7255**	8000
			M14	50	46	10	45	**68 / 7256**	8500
			M16	50	46	10	45	**68 / 7257**	9000
			M20	50	46	10	45	**68 / 7258**	9500
	2,5	45	M8	50	45	10	45	**68 / 7942**	7000
			M10	50	45	10	45	**68 / 7626**	7500
			M12	50	45	10	45	**68 / 7259**	8000
			M14	50	45	10	45	**68 / 7260**	8500
			M16	50	45	10	45	**68 / 7261**	9000
			M20	50	45	10	45	**68 / 7262**	9500
	3	44	M8	50	44	10	45	**68 / 82080**	7000
			M10	50	44	10	45	**68 / 80927**	7500
			M12	50	44	10	45	**68 / 80928**	8000
			M14	50	44	10	45	**68 / 80929**	8500
			M16	50	44	10	45	**68 / 80930**	9000
			M20	50	44	10	45	**68 / 80931**	9500
60	2	56	M8	60	56	10	45	**68 / 81032**	7000
			M10	60	56	10	45	**68 / 80932**	7500
			M12	60	56	10	45	**68 / 80933**	8000
			M14	60	56	10	45	**68 / 80934**	8500
			M16	60	56	10	45	**68 / 80935**	9000
			M20	60	56	10	45	**68 / 80936**	9500
	3	54	M8	60	54	10	45	**68 / 82081**	7000
			M10	60	54	10	45	**68 / 80937**	7500
			M12	60	54	10	45	**68 / 80938**	8000
			M14	60	54	10	45	**68 / 80939**	8500
			M16	60	54	10	45	**68 / 80940**	9000
			M20	60	54	10	45	**68 / 80941**	9500
80	3	74	M14	80	74	10	45	**68 / 85163**	8500
			M16	80	74	10	45	**68 / 82082**	9000
			M20	80	74	10	45	**68 / 82013**	9500

Material: Bush in reinforced polyamide black colour; threaded insert in brass.
Box quantity: 24 pieces.
On request

- **Bushes:** With different thicknesses and colours.
- **Threaded insert:** In nickel plated brass.
- **Box quantity:** According to your request.

Threaded bushings

(for square tubes: sizes and threads in Inches)

Part. **68**

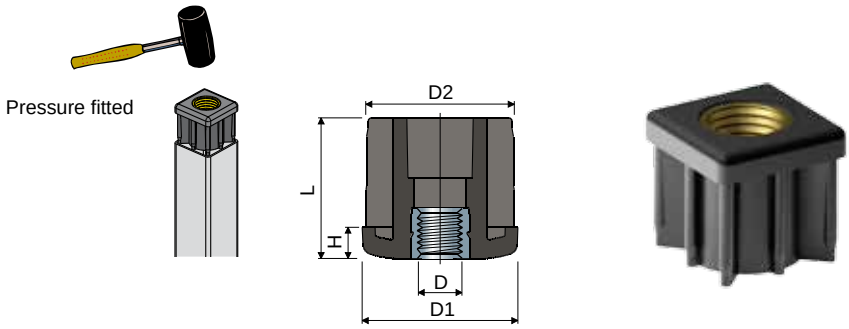

Tube dimensions											Code	Max static load
Outside		Thickness		Inside	Thread D		D1	D2	H	L		
(inches)	(mm)	(inches)	(mm)	(mm)	(UNC)	(mm)	(mm)	(mm)	(mm)	(mm)		(N)
1”1/2	(38,1)	0,065”	(1,65)	34,8	3/8”-16	(9,52)	38	34,8	8	38	**68 / 82707**	5000
					1/2”-13	(12,7)	38	34,8	8	38	**68 / 82708**	5000
					5/8”-11	15,87)	38	34,8	8	38	**68 / 82709**	6500
					3/4”-10	(19,05)	38	34,8	8	38	**68 / 82710**	9000
		0,12”	(3,05)	32	3/8”-16	(9,52)	38	32	8	38	**68 / 82711**	5000
					1/2”-13	(12,7)	38	32	8	38	**68 / 82712**	5000
					5/8”-11	(15,87)	38	32	8	38	**68 / 82713**	6500
					3/4”-10	(19,05)	38	32	8	38	**68 / 82714**	9000
2”	(50,8)	0,065”	(1,65)	47,5	3/8”-16	(9,52)	50,6	47,5	10	45	**68 / 82715**	5000
					1/2”-13	(12,7)	50,6	47,5	10	45	**68 / 82716**	5000
					5/8”-11	(15,87)	50,6	47,5	10	45	**68 / 82717**	6500
					3/4”-10	(19,05)	50,6	47,5	10	45	**68 / 82718**	9000
		0,109”	(2,77)	45,26	3/8”-16	(9,52)	50,6	45,26	10	45	**68 / 82719**	5000
					1/2”-13	(12,7)	50,6	45,26	10	45	**68 / 82720**	5000
					5/8”-11	(15,87)	50,6	45,26	10	45	**68 / 82721**	6500
					3/4”-10	(19,05)	50,6	45,26	10	45	**68 / 82722**	9000
		0,12”	(3,05)	44,7	3/8”-16	(9,52)	50,6	44,7	10	45	**68 / 82726**	5000
					1/2”-13	(12,7)	50,6	44,7	10	45	**68 / 82727**	5000
					5/8”-11	(15,87)	50,6	44,7	10	45	**68 / 82728**	6500
					3/4”-10	(19,05)	50,6	44,7	10	45	**68 / 82729**	9000

Material: Bush in reinforced polyamide black colour; threaded insert in brass.
Box quantity: 24 pieces.

On request
- **Bushes:** With different thicknesses and colours.
- **Threaded insert:** In nickel plated brass.
- **Box quantity:** According to your request.

Closing caps

Part. 116 Closing cap, round

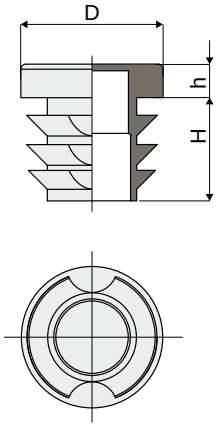

	Dimensions			Tube thickness	
Code	D (mm)	h (mm)	H (mm)	Min. (mm)	Max. (mm)
116 / 84153	38,0	5,0	11,5	1,0	3,5
116 / 84154	42,4	5,0	11,5	1,0	2,5
116 / 84155	48,3	5,0	11,5	1,2	3,6
116 / 84156	60,0	5,0	18,5	1,5	3,0

MATERIALS: Cap in black polyethylene.
FEATURES: To be assembled to the tubes edges.
BOX QUANTITY: 96 pieces.
ON REQUEST:
- Caps: Ractangular shape.
- Box quantities: According to your request.

Part. 117 Closing cap, square

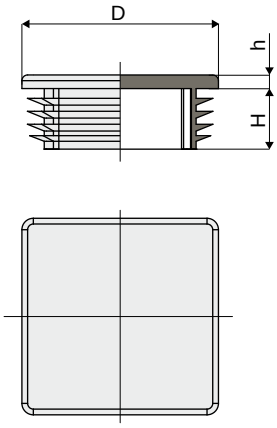

	Dimensions			Tube thickness	
Code	D (mm)	h (mm)	H (mm)	Min, (mm)	Max, (mm)
117 / 84157	25	5,0	11,5	1,0	3,0
117 / 84158	30	5,0	11,5	1,0	2,5
117 / 84159	35	5,0	14,5	1,0	3,0
117 / 84160	40	5,0	14,5	1,0	3,0
117 / 84161	50	5,0	14,5	1,0	2,5
117 / 84162	60	5,0	24,0	1,5	3,5

MATERIALS: Cap in black polyethylene.
FEATURES: To be assembled to the tubes edges.
BOX QUANTITY: 96 pieces.
ON REQUEST:
- Caps: Rectangular shape.
- Box quantities: According to your request.

Chemical resistance

CHEMICAL AGENT	POLYAMIDE PA		POLYPROPYLE PP		ACETAL POM		STAINLESS STEEL AISI 304		NICKEL PLATED BRASS		NBR RUBBER	
	Conc.%	23° C	Conc.%	23° C	Conc.%	23° C	Conc.%	23° C	Conc.%	23° C	Conc.%	23° C
ACETIC ACID	10	-	40	+	5	-	20	+		/		-
ACETONE	100	+		+		/	50	+		+		-
AMMONIA	10	+	30	+	Sol.	+	50	+		-		/
AMMONIA CONC.		+		+		-						-
ANILINE		/	100	+	3	+	3	+				-
BEER		+		+		+		+		+		+
BENZENE		+		+		+	70	/				-
BENZOL	100	+		/		+		+		+		-
BORIC ACID	10	+	Sat.	+		+	100	/				+
BUTTER		+		+		+		+		+		+
BUTYRIC ACID		-	100	+		-	5	+				-
CALCIUM CHLORIDE	10	+	50	+		/	10	-		+		+
CARBON SULPHIDE	100	+		+		+		+				-
CARBON TETRACHLORIDE		+		-		+	10	-		+		-
CAUSTIC POTASSIUM	10	+					50	+				/
CAUSTIC SODA	10	+	52	+	25	-		+				/
CHLORINATED WATER		+		-		-		-				-
CHLOROFORM	100	-		/		-	100	+		+		-
CITRIC ACID	10	/	10	+		/	5	+		-		+
CUPRIC SULPHATE	10	+	Sat.	+		+	5	+				+
DISTILLED WATER		+		+		+		+				+
ETHYL ALCOHOL	96	+	96	+		+	10	+		+		/
ETHYL CHLORIDE	100	+		-		+		+		/		-
ETHYL ETHER	100	+		+		+						-
FERRIC CHLORIDE	10	+		+			20	-				+
FOOD FATS		+		+		+		+				+
FOOD OILS		+		+		+		+				+
FORMALDEHYDE	30	+	40	+		+	100	+		+		-
FORMIC ACID	10	-	100	+	10	-	5	/		+		-
FREON 12		+						+				+
FRUIT JUICES		+		+		+		+				+
GLYCERINE		+		+		+		+		+		+
HYDROCHLORIC ACID	10	-	30	+	37	-		-		/	10	/
HYDROCHLORIC ACID	2	-	2	+	2	/					2	/
HYDROFLUORIC ACID	40	-	40	+		-		-			65	-
HYDROGENE PEROXIDE	3	-	30	+		-	30	+		/	80	-
IODINE		-		+		+						/
LACTIC ACID	10	+	20	+		+	5	+		-		+
MAGNESIUM CHLORIDE	10	+	Sat.	+			5	+				+
MERCURY		+	100	+		+	100	/		/		+
METHYL ALCHOHOL	100	+		+		+	100	/		+		/
METHYLENE CHLORIDE	100	+		/		-		/				-
MILK		+		+		+		+		+		+
MINERAL OILS		+		+		+		+				+
NITRIC ACID	10	-		+	5	-	10	+			10	-
OLEIC ACID	100	+		+		-	100	/		+		/
PARAFFIN		+	100	/		+		+				+
PETROLEUM		+	100	/		+		+		+		+
PETROLEUM ETHER		+		+		+		+		+		-
PHOSFORIC ACID	10	-	85	+	10	-	10	-		-	20	/
SEA WATER		+		+		/		+		+		+
SILICON OIL		+		+								+
SOAP SOLUTION		+		+								+
SODIUM CARBONATE	10	+	Sat.	+		+	5	+				+
SODIUM CHLORIDE	10	+	Sat.	+		+	5	+		+		+
SODIUM HYDROXIDE	10	+	30	+	10	+		-		+		/
SODIUM HYPOCHLORITE		+	20	+		-		-				-
SODIUM SILICATE		+					100	+				+
SODIUM SULPHATE	10	+	Sat.	+		+	5	+				+
SULPHURIC ACID	10	-	98	+	40	-	10	-		+		-
TARTARIC ACID		+	10	+	30	/	10	+		-		+
TETRALINE		+		-								-
TINCTURE OF IODINE		-		+		+				-		/
TRANSFORMER OIL		+		/								+
TRICHLORETHYLENE		/		/		-		+		+		-
TURPENTINE		/		-		-		+				-
VASELINE		+		+		+						+
VEGETABLE JUICES		+		+		+		+				+
VEGETABLE OILS		+		+		+		+				+
VINEGAR		+		+		+		+		+		/
WATER AND SOAP		+		+		+		+				+
WHISKY		+		+		+		+		+		+
WINE		+		+		+		+		+		+
XILOL		+		-		+		+		/		-
ZINC CHLORIDE	10	/	20	+			10	-				+

Abbreviations: Sat. = Saturated
+ = Good resistance.
/ = Fairly good resistance (limited use depending on working conditions).
- = Poor resistance (not recommended).
N.B.: Where tests have not been carried out the spaces are left blank.

The data shown in the table are to be considered as purely indicative, since material behaviour under real working conditions depends on different factors: temperature, concentration of the chemical agent, lasting effect of the chemical agent (quik or long).

Operating temperatures

		Operating temperatures (°C)		
		contact with air		contact with hot water
Material	Description	Min	Max	Max
PA	Polyamid	0	+ 80	+ 65
PA FV	Reinforced polyamid	- 5	+ 120	+ 100
PP	Polypropylene	+ 5	+ 105	+ 105
PP FV	Reinforced polypropylene	+ 5	+ 115	+ 115
POM	Acetal	- 40	+ 80	+ 65
AISI 303 - AISI 304	Austenitic stainless steel (18/8)	- 70	+ 430	+ 120
Fe Zn	Zinc plated steel	- 40	+ 180	-
OT	Nickel plated brass	- 40	+ 180	+ 120
HMWPE	Polyethylene with high molecular density	- 200	+ 80	-
UHMWPE	Polyethylene with ultra high molecular density	- 200	+ 80	-

Units of measurement

Length					
		m	cm	mm	in
1 m	=	1	100	1000	39,37008
1 cm	=	0,01	1	10	0,393701
1 mm	=	0,001	0,1	1	0,039370
1 in	=	0,0254	2,54	25,4	1

Mass					
		kg	g	kgf · s²/m	lb
1 kg	=	1	1000	0,1019716	2,204623
1 g	=	0,001	1	0,000102	0,0022046
1 kgf · s²/m	=	9,80665	9806,65	1	21,61996
1 lb	=	0,4535924	453,5924	0,0462536	1

Force				
		N	kgf	lbf
1 N	=	1	0,1019716	0,2248089
1 kgf	=	9,80665	1	2,204622
1 lbf	=	4,448222	0,4535924	1

Work				
		J (N · m)	kgf · m	lbf · in
1 J (N · m)	=	1	0,1020	8,851124
1 kgf · m	=	9,807	1	86,799893
1 lbf · in	=	0,113	0,0115	1

Part.	Pag.
1	183
2	184
3	183
4	184
10	188
15	189
18 pa	185
18	190
25 pa	186
25	192
27 pa	185
27	191
38 pa	186
38	193
45	194
64 mm	222
64 inches	224
68 mm	225
68 inches	227
79	196
81	201
82	221
87	197
89	198
92	195
93	199
94	204
95	205
96	202
97	206
98	203
99	207
101	211
103	217
104	200
107	210
108	216
109	214
110	220
111	213
112	219
113	209
114	215
115	208
116	228
117	228
118	187
119	218
120	212
200	10
201	10
202	11
203	11
204	47
205	47
206	54
207	13
208	12
209	23
210	15
211	13
212	12
213	17
214	17
215	18
216	20
217	23
218	21
219	22
220	24
221	32
222	32
223	33
224	25
225	25
226	34
227	34
228	34
229	42
230	41
231	42
232	43
233	82
234	82
235	26
236	26
237	55
238	56
239	57
240	55
241	57
242	24
243	18
244	21
245	71
246	34
247	35
248	35
249	71
250	68
251	69
252	70
253	70
254	73
255	22
256	33
257	84
258	85
259	85
260	87
261	88
262	88
263	78
264	79
265	79
266	32
267	61
268	75
269	75
270	64
271	64
272	67
273	65
274	66
275	67
276	72
277	62
278	62
279	20
280	19
281	19
282	73
283	81
285	74
286	65
287	66
288	83
289	41
290	46
291	43
293	72
294	37
296	69
297	58
299	126
300	78
301	46
302	68
303	39
304	39
305	39
306	90
307	90
308	91
310	75
311	74
312	58
313	35
314	35
315	36
316	122
317	78
318	96
319	91
320	96
321	96
322	96
323	96
324	56
325	92
326	92
327	93
328	93
329	96
330	107
331	123
332	40
333	59
334	36
335	80
336	80
337	36
338	36
339	101
340	98
341	98
342	99
343	99
344	102
345	100
346	44
347	44
348	45
349	45
350	38
352	124
353	110
354	109
355	94
356	94
357	95
358	95
359	61
360	127
361	114
362	114
363	114
364	114
365	115
366	115
367	115
368	115
369	115
370	113
371	113
372	113
373	109
374	125
375	107
376	83
377	117
379	63
380	63
381	118
382	37
383	38
384	118
385	118
386	37
387	27
388	106
389	119
390	119
391	119
392	27
393	106
394	106
395	106
397	40
398	47
399	71
400	40
401	16
402	14
403	16
404	16
405	50
406	30
407	31
408	28
409	14
410	49
411	49
412	48
413	48
414	81
415	97
416	87
417	84
418	111
419	111
420	110
421	102
422	101
423	100
424	50
425	108
426	108
427	53
428	60
429	122
430	86
431	86
432	89
433	89
434	53
435	59
436	27
437	97
438	112
439	52
440	51
441	29
442	29
443	51
444	121
446	116
448	103
449	104
450	105
451	103
452	104
453	105
454	76
455	76
456	77
457	76
458	77
459	77
460	46
461	120
700	131
701	130
702	130
703	130
704	131
705	132
706	132
Corner tracks	133
Straight tracks	133
MUCF	140
MUCF/C	136
MUCF/CS	142
MUCF/CX	138
MUCFL	160
MUCFL/C	156
MUCFL/CX	158
UCF	140
UCFB	170
UCFB/C	166
UCFB/CX	168
UCF/C	136
UCF/CA	144
UCF/CS	142
UCF/CX	138
UCF/CXA	146
UCFL	152
UCFL/C	148
UCFL/CA	162
UCFL/CS	154
UCFL/CX	150
UCFL/CXA	164
UCP	176
UCP/C	172
UCP/CX	174

Cod.	Pag.	Cod.	Pag.	Cod.	Pag.	Cod.	Pag.	Cod.	Pag.	Cod.	Pag.	Cod.	Pag.
7000	188	7067	190	7134	194	7201	207	7266	192	7274	192	7277	205
7001	188	7068	190	7135	194	7202	207	7267	186	7274	193	7277	206
7002	188	7069	190	7136	194	7203	207	7267	193	7274	194	7277	207
7003	188	7070	192	7137	194	7204	207	7267	197	7274	209	7277	208
7004	188	7071	192	7138	194	7205	207	7268	194	7274	212	7277	209
7005	188	7072	192	7139	194	7206	207	7268	198	7274	215	7277	210
7006	188	7073	192	7140	194	7207	207	7269	183	7274	216	7277	211
7007	188	7074	192	7141	194	7208	207	7269	184	7274	217	7277	212
7008	188	7075	192	7142	194	7209	207	7269	184	7274	218	7277	213
7009	188	7076	192	7143	194	7210	222	7269	187	7274	219	7277	214
7010	188	7077	192	7144	194	7211	222	7269	188	7274	220	7277	215
7011	188	7078	192	7145	194	7212	222	7269	189	7275	185	7277	216
7012	188	7079	192	7146	194	7213	222	7269	190	7275	185	7277	217
7013	188	7080	192	7147	194	7214	222	7269	191	7275	186	7277	218
7014	188	7081	192	7148	194	7215	222	7269	192	7275	186	7277	219
7015	188	7082	192	7149	194	7216	222	7269	196	7275	190	7277	220
7016	188	7083	192	7150	194	7217	222	7269	212	7275	191	7278	185
7017	188	7084	192	7151	194	7218	222	7270	184	7275	192	7278	185
7018	189	7085	192	7152	194	7219	223	7270	184	7275	193	7278	186
7019	189	7086	192	7153	194	7220	223	7270	187	7275	194	7278	186
7020	189	7087	192	7154	197	7221	223	7270	188	7275	195	7278	190
7021	189	7088	192	7155	197	7222	223	7270	189	7275	197	7278	191
7022	189	7089	192	7156	197	7223	223	7270	190	7275	198	7278	192
7023	189	7090	192	7157	197	7224	223	7270	191	7275	199	7278	193
7024	189	7091	192	7158	197	7225	223	7270	192	7275	202	7278	194
7025	189	7092	192	7159	197	7226	223	7270	193	7275	203	7278	195
7026	189	7093	192	7160	197	7227	223	7270	212	7275	204	7278	197
7027	189	7094	192	7161	197	7228	223	7271	188	7275	205	7278	198
7028	189	7095	192	7162	197	7229	223	7271	189	7275	206	7278	199
7029	189	7096	192	7163	197	7230	223	7271	190	7275	207	7278	202
7030	189	7097	192	7164	197	7231	223	7271	191	7275	212	7278	203
7031	189	7098	192	7165	197	7232	225	7271	192	7276	185	7278	205
7032	189	7099	192	7166	198	7233	225	7271	193	7276	185	7278	206
7033	189	7100	192	7167	198	7234	225	7271	194	7276	186	7278	207
7034	189	7101	192	7168	198	7235	225	7271	212	7276	186	7278	208
7035	189	7102	192	7169	198	7236	225	7272	184	7276	190	7278	210
7036	190	7103	192	7170	198	7237	225	7272	184	7276	191	7278	211
7037	190	7104	192	7171	198	7238	225	7272	187	7276	192	7278	212
7038	190	7105	192	7172	198	7239	225	7272	188	7276	193	7278	213
7039	190	7106	192	7173	198	7240	225	7272	189	7276	194	7278	214
7040	190	7107	192	7174	198	7241	225	7272	190	7276	195	7278	215
7041	190	7108	192	7175	198	7242	225	7272	191	7276	197	7278	216
7042	190	7109	192	7176	198	7243	225	7272	192	7276	198	7278	217
7043	190	7110	193	7177	198	7244	225	7272	196	7276	199	7278	218
7044	190	7111	193	7178	198	7245	225	7272	209	7276	201	7278	219
7045	190	7112	193	7179	198	7246	225	7272	212	7276	202	7278	220
7046	190	7113	193	7180	198	7247	225	7273	184	7276	203	7279	192
7047	190	7114	193	7181	198	7248	225	7273	184	7276	204	7279	193
7048	190	7115	193	7182	206	7249	225	7273	187	7276	205	7279	194
7049	190	7116	193	7183	206	7250	225	7273	188	7276	206	7279	195
7050	190	7117	193	7184	206	7251	226	7273	189	7276	207	7279	197
7051	190	7118	193	7185	206	7252	226	7273	190	7276	212	7279	198
7052	190	7119	193	7186	206	7253	226	7273	191	7277	185	7279	199
7053	190	7120	193	7187	206	7254	226	7273	192	7277	185	7279	201
7054	190	7121	193	7188	206	7255	226	7273	193	7277	186	7279	202
7055	190	7122	193	7189	206	7256	226	7273	209	7277	186	7279	203
7056	190	7123	193	7190	206	7257	226	7273	212	7277	190	7279	204
7057	190	7124	193	7191	206	7258	226	7273	215	7277	191	7279	205
7058	190	7125	193	7192	206	7259	226	7273	216	7277	192	7279	206
7059	190	7126	193	7193	206	7260	226	7273	217	7277	193	7279	207
7060	190	7127	193	7194	207	7261	226	7273	218	7277	194	7280	192
7061	190	7128	193	7195	207	7262	226	7273	219	7277	195	7280	193
7062	190	7129	193	7196	207	7263	188	7273	220	7277	197	7280	194
7063	190	7130	193	7197	207	7264	189	7274	188	7277	198	7280	195
7064	190	7131	193	7198	207	7265	185	7274	189	7277	199	7280	197
7065	190	7132	194	7199	207	7265	190	7274	190	7277	202	7280	198
7066	190	7133	194	7200	207	7266	186	7274	191	7277	203	7280	199

Cod.	Pag.	Cod.	Pag.	Cod.	Pag.	Cod.	Pag.	Cod.	Pag.	Cod.	Pag.	Cod.	Pag.
7280	202	7286	189	7290	194	7292	214	7395	188	7462	192	7541	205
7280	203	7286	190	7290	195	7292	215	7396	189	7463	192	7542	205
7280	205	7286	191	7290	197	7292	216	7397	189	7464	192	7543	205
7280	206	7286	192	7290	198	7292	217	7398	189	7465	192	7544	205
7280	207	7286	196	7290	199	7292	218	7399	189	7466	192	7545	205
7280	208	7286	209	7290	201	7292	219	7400	189	7467	192	7546	205
7280	210	7286	212	7290	202	7292	220	7401	189	7472	192	7547	205
7280	211	7287	184	7290	203	7293	192	7402	190	7473	192	7548	205
7280	213	7287	184	7290	204	7293	193	7403	190	7474	193	7549	205
7280	214	7287	187	7290	205	7293	194	7404	190	7475	193	7550	206
7280	215	7287	188	7290	206	7293	195	7405	190	7476	193	7551	206
7280	216	7287	189	7290	207	7293	197	7406	190	7477	193	7552	206
7280	217	7287	190	7290	212	7293	198	7407	190	7478	193	7553	206
7280	218	7287	191	7291	185	7293	199	7408	190	7479	193	7554	206
7280	219	7287	192	7291	185	7293	201	7409	190	7484	193	7555	206
7280	220	7287	193	7291	186	7293	202	7410	190	7485	193	7556	207
7281	198	7287	209	7291	186	7293	203	7411	190	7486	194	7557	207
7281	199	7287	212	7291	190	7293	204	7412	191	7487	194	7558	207
7281	202	7287	215	7291	191	7293	205	7413	191	7488	194	7559	207
7281	203	7287	216	7291	192	7293	206	7414	191	7489	194	7560	207
7281	204	7287	217	7291	193	7293	207	7415	191	7490	194	7561	207
7281	207	7287	218	7291	194	7294	192	7416	191	7491	194	7562	202
7282	198	7287	219	7291	195	7294	193	7417	191	7496	194	7563	202
7282	199	7287	220	7291	197	7294	194	7418	191	7497	194	7564	202
7282	202	7288	188	7291	198	7294	195	7419	191	7498	197	7565	202
7282	203	7288	189	7291	199	7294	197	7420	191	7499	197	7566	202
7282	207	7288	190	7291	202	7294	198	7421	191	7500	197	7567	202
7282	208	7288	191	7291	203	7294	199	7422	191	7501	197	7568	202
7282	215	7288	192	7291	205	7294	202	7423	191	7502	197	7569	202
7282	216	7288	193	7291	206	7294	203	7424	191	7503	197	7570	202
7282	217	7288	194	7291	207	7294	205	7425	191	7504	198	7571	202
7282	218	7288	209	7291	208	7294	206	7426	191	7505	198	7572	202
7282	219	7288	212	7291	209	7294	207	7427	191	7506	198	7573	202
7282	220	7288	215	7291	210	7294	208	7428	191	7507	198	7574	202
7283	183	7288	216	7291	211	7294	210	7429	191	7508	198	7575	202
7283	184	7288	217	7291	212	7294	211	7430	191	7509	198	7576	202
7283	184	7288	218	7291	213	7294	213	7431	191	7510	199	7577	202
7283	187	7288	219	7291	214	7294	214	7432	191	7511	199	7578	202
7283	188	7288	220	7291	215	7294	215	7433	191	7512	199	7579	202
7283	189	7289	185	7291	216	7294	216	7434	191	7513	199	7580	202
7283	190	7289	185	7291	217	7294	217	7435	191	7514	199	7581	202
7283	191	7289	186	7291	218	7294	218	7436	191	7515	199	7582	202
7283	192	7289	186	7291	219	7294	219	7437	191	7516	199	7583	202
7283	196	7289	190	7291	220	7294	220	7438	191	7517	199	7584	203
7283	212	7289	191	7292	185	7295	198	7439	191	7518	199	7585	203
7284	184	7289	192	7292	185	7295	199	7440	191	7519	199	7586	203
7284	184	7289	193	7292	186	7295	202	7441	191	7520	199	7587	203
7284	187	7289	194	7292	186	7295	203	7442	191	7521	199	7588	203
7284	188	7289	195	7292	190	7295	204	7443	191	7522	199	7589	203
7284	189	7289	197	7292	191	7295	207	7444	191	7523	199	7590	203
7284	190	7289	198	7292	192	7296	198	7445	191	7524	199	7591	203
7284	191	7289	199	7292	193	7296	199	7446	191	7525	199	7592	203
7284	192	7289	202	7292	194	7296	202	7447	191	7526	199	7593	203
7284	193	7289	203	7292	195	7296	203	7448	191	7527	199	7594	203
7284	212	7289	204	7292	197	7296	207	7449	191	7528	199	7595	203
7285	188	7289	205	7292	198	7296	208	7450	191	7529	199	7596	203
7285	189	7289	206	7292	199	7296	215	7451	191	7530	199	7597	203
7285	190	7289	207	7292	202	7296	216	7452	191	7531	199	7598	203
7285	191	7289	212	7292	203	7296	217	7453	191	7532	205	7599	203
7285	192	7290	185	7292	205	7296	218	7454	191	7533	205	7600	203
7285	193	7290	185	7292	206	7296	219	7455	191	7534	205	7601	203
7285	194	7290	186	7292	207	7296	220	7456	192	7535	205	7602	203
7285	212	7290	186	7292	208	7390	188	7457	192	7536	205	7603	203
7286	184	7290	190	7292	210	7391	188	7458	192	7537	205	7604	203
7286	184	7290	191	7292	211	7392	188	7459	192	7538	205	7605	203
7286	187	7290	192	7292	212	7393	188	7460	192	7539	205	7614	223
7286	188	7290	193	7292	213	7394	188	7461	192	7540	205	7615	223

Cod.	Pag.	Cod.	Pag.	Cod.	Pag.	Cod.	Pag.	Cod.	Pag.	Cod.	Pag.	Cod.	Pag.
7616	223	7716	184	7908	199	80053	169	80076	155	80160	185	80255	159
7617	223	7717	184	7909	199	80053	169	80076	155	80161	185	80255	159
7618	223	7722	184	7910	205	80053	171	80076	159	80162	186	80255	161
7619	223	7723	184	7911	205	80053	171	80076	159	80163	225	80255	161
7620	223	7726	184	7912	206	80053	175	80076	161	80164	225	80255	169
7621	223	7727	184	7913	206	80053	175	80076	161	80165	225	80255	169
7622	223	7732	184	7914	207	80053	177	80076	169	80172	225	80255	171
7623	223	7733	184	7915	207	80053	177	80076	169	80173	225	80255	171
7624	226	7736	184	7916	202	80054	141	80076	171	80175	139	80255	175
7625	226	7737	184	7917	202	80055	141	80076	171	80176	139	80255	175
7626	226	7758	225	7918	203	80057	137	80076	175	80177	139	80255	177
7627	185	7782	195	7919	203	80058	137	80076	175	80178	143	80255	177
7628	185	7783	195	7930	223	80060	137	80076	177	80179	143	80256	139
7629	186	7784	195	7932	223	80061	137	80076	177	80180	143	80256	139
7630	186	7785	195	7934	223	80063	153	80077	139	80181	151	80256	139
7632	185	7786	195	7935	223	80064	153	80077	139	80182	151	80256	139
7632	191	7787	195	7936	225	80065	153	80077	141	80183	151	80256	139
7633	195	7788	195	7937	225	80067	149	80077	141	80184	155	80256	139
7633	199	7789	195	7938	225	80068	149	80077	143	80185	155	80256	139
7634	183	7790	195	7939	225	80069	149	80077	143	80186	155	80256	139
7634	184	7791	195	7940	226	80071	149	80077	151	80209	221	80256	139
7634	184	7792	195	7941	226	80072	149	80077	151	80210	221	80256	141
7634	187	7793	195	7942	226	80073	149	80077	153	80211	221	80256	141
7634	188	7794	195	80005	137	80075	139	80077	153	80212	221	80256	141
7634	189	7795	195	80009	137	80075	139	80077	155	80214	201	80256	141
7634	190	7796	195	80010	141	80075	139	80077	155	80248	137	80256	141
7634	191	7797	195	80011	139	80075	141	80077	159	80249	137	80256	141
7634	192	7798	195	80011	139	80075	141	80077	159	80250	137	80256	141
7634	212	7799	195	80011	139	80075	141	80077	161	80251	137	80256	141
7635	184	7800	195	80011	141	80075	143	80077	161	80252	139	80256	141
7635	184	7801	195	80011	141	80075	143	80077	169	80253	139	80256	143
7635	187	7802	222	80011	141	80075	151	80077	169	80254	139	80256	143
7635	188	7803	222	80011	143	80075	151	80077	171	80254	139	80256	143
7635	189	7804	222	80011	143	80075	151	80077	171	80254	141	80256	143
7635	190	7805	222	80011	151	80075	153	80077	175	80254	141	80256	143
7635	191	7806	222	80011	151	80075	153	80077	175	80254	143	80256	143
7635	192	7807	225	80011	151	80075	153	80077	177	80254	143	80256	143
7635	209	7808	225	80011	153	80075	155	80077	177	80254	151	80256	143
7635	212	7809	225	80011	153	80075	155	80078	139	80254	151	80256	147
7636	183	7817	225	80011	153	80075	159	80078	139	80254	153	80256	147
7636	184	7818	225	80011	155	80075	159	80078	141	80254	153	80256	147
7636	184	7851	198	80011	155	80075	159	80078	141	80254	155	80256	151
7636	187	7852	198	80011	169	80075	161	80078	143	80254	155	80256	151
7636	188	7882	222	80011	169	80075	161	80078	143	80254	159	80256	153
7636	189	7883	222	80011	169	80075	161	80078	151	80254	159	80256	153
7636	190	7886	189	80011	171	80075	169	80078	151	80254	161	80256	155
7636	191	7887	189	80011	171	80075	169	80078	153	80254	161	80256	155
7636	192	7888	190	80011	171	80075	169	80078	153	80254	169	80256	159
7636	212	7889	190	80011	175	80075	171	80078	155	80254	169	80256	159
7637	184	7890	191	80011	175	80075	171	80078	155	80254	171	80256	161
7637	184	7891	191	80011	175	80075	171	80078	159	80254	171	80256	161
7637	187	7892	192	80011	177	80075	175	80078	159	80254	175	80256	165
7637	188	7893	192	80011	177	80075	175	80078	161	80254	175	80256	165
7637	189	7894	188	80011	177	80075	175	80078	161	80254	177	80256	165
7637	190	7895	188	80036	225	80075	177	80078	169	80254	177	80256	169
7637	191	7896	189	80053	139	80075	177	80078	169	80255	139	80256	169
7637	192	7897	189	80053	139	80075	177	80078	171	80255	139	80256	171
7637	209	7898	190	80053	141	80076	139	80078	171	80255	141	80256	171
7637	212	7899	190	80053	141	80076	139	80078	175	80255	141	80256	175
7690	188	7900	191	80053	143	80076	141	80078	175	80255	143	80256	175
7691	188	7901	191	80053	143	80076	141	80078	177	80255	143	80256	177
7702	184	7902	192	80053	151	80076	143	80078	177	80255	151	80256	177
7703	184	7903	192	80053	151	80076	143	80155	186	80255	151	80257	139
7706	184	7904	197	80053	153	80076	151	80156	184	80255	153	80257	139
7707	184	7905	197	80053	153	80076	151	80157	184	80255	153	80257	139
7712	184	7906	198	80053	155	80076	153	80158	184	80255	155	80257	139
7713	184	7907	198	80053	155	80076	153	80159	184	80255	155	80257	141

Cod.	Pag.	Cod.	Pag.	Cod.	Pag.	Cod.	Pag.	Cod.	Pag.	Cod.	Pag.	Cod.	Pag.
80257	141	80494	139	80639	15	80714	225	80820	54	80925	226	81022	223
80257	141	80494	139	80640	15	80715	225	80821	54	80926	226	81023	223
80257	141	80494	141	80641	15	80716	225	80822	54	80927	226	81024	223
80257	143	80494	141	80642	15	80717	225	80857	222	80928	226	81025	223
80257	143	80494	143	80643	15	80718	225	80858	222	80929	226	81026	223
80257	143	80494	143	80644	15	80749	42	80859	222	80930	226	81027	223
80257	143	80494	147	80645	15	80753	10	80860	222	80931	226	81028	223
80257	143	80494	147	80646	15	80754	23	80861	222	80932	226	81029	223
80257	143	80494	165	80647	15	80755	17	80862	222	80933	226	81030	223
80257	147	80494	165	80648	13	80756	17	80863	222	80934	226	81031	225
80257	147	80495	139	80649	13	80757	17	80864	222	80935	226	81032	226
80257	151	80495	139	80650	12	80758	20	80865	222	80936	226	81043	139
80257	151	80495	141	80651	12	80759	20	80866	222	80937	226	81045	141
80257	153	80495	141	80652	17	80760	23	80867	222	80938	226	81047	139
80257	153	80495	147	80653	17	80761	23	80868	222	80939	226	81049	139
80257	155	80495	147	80654	17	80762	23	80869	222	80940	226	81050	139
80257	155	80495	165	80655	17	80764	12	80870	222	80941	226	81051	139
80257	159	80495	165	80656	17	80765	12	80871	222	80953	223	81052	141
80257	159	80499	147	80657	17	80766	12	80873	222	80958	55	81053	151
80257	161	80500	147	80658	18	80767	12	80874	222	80959	55	81054	151
80257	161	80501	147	80659	18	80768	12	80875	222	80960	55	81055	151
80257	165	80514	141	80660	18	80769	12	80876	222	80961	55	81056	151
80257	165	80515	141	80662	21	80770	12	80877	222	80962	55	81057	137
80257	169	80519	153	80663	21	80771	12	80878	222	80963	55	81058	137
80257	169	80520	153	80664	22	80772	82	80879	222	80970	82	81059	145
80257	171	80521	153	80665	22	80773	82	80880	222	80976	141	81060	145
80257	171	80522	153	80666	22	80774	82	80881	222	80978	47	81061	145
80257	175	80523	155	80667	24	80775	82	80882	222	80979	47	81062	149
80257	175	80540	159	80668	32	80776	82	80883	222	80980	47	81063	149
80257	177	80542	161	80669	32	80777	82	80884	222	80981	47	81064	149
80257	177	80546	225	80670	32	80778	26	80885	222	80982	47	81065	149
80258	141	80561	139	80671	32	80779	26	80886	222	80985	56	81066	149
80259	141	80588	10	80672	32	80780	26	80887	222	80986	56	81067	149
80260	143	80589	10	80673	32	80786	201	80888	222	80987	56	81068	149
80261	143	80590	10	80674	33	80787	42	80889	222	80988	57	81069	149
80262	149	80591	10	80675	33	80788	42	80890	223	80989	57	81135	34
80263	149	80592	10	80676	25	80789	139	80891	223	80990	57	81137	35
80264	151	80593	10	80677	25	80790	13	80892	223	80991	57	81139	35
80265	153	80609	42	80678	34	80791	13	80893	223	80992	57	81147	34
80266	155	80611	41	80679	34	80792	13	80894	223	80993	57	81148	34
80271	10	80612	10	80680	34	80793	13	80895	223	80994	57	81176	17
80322	143	80613	10	80681	42	80794	13	80896	223	80995	57	82000	88
80325	221	80614	10	80682	42	80795	13	80897	223	80996	55	82001	88
80326	221	80615	10	80683	42	80796	13	80898	223	80997	55	82002	87
80327	221	80616	10	80684	41	80797	13	80899	223	80998	55	82003	85
80377	137	80617	10	80685	41	80798	47	80900	223	80999	55	82004	85
80378	137	80618	10	80686	41	80799	47	80901	223	81000	55	82005	84
80400	137	80619	10	80687	42	80800	47	80902	223	81001	55	82010	54
80409	145	80620	10	80688	43	80801	47	80903	223	81002	24	82013	226
80410	145	80621	10	80693	221	80802	47	80904	223	81003	18	82017	71
80411	145	80622	11	80694	221	80803	47	80905	223	81004	18	82018	71
80412	145	80623	11	80695	141	80804	47	80906	223	81005	18	82019	71
80413	147	80624	11	80697	137	80805	47	80907	223	81006	21	82020	71
80414	147	80625	11	80699	137	80806	47	80908	223	81007	21	82021	71
80445	137	80626	11	80701	139	80807	47	80909	223	81008	22	82021	71
80446	137	80627	11	80702	195	80808	47	80913	225	81009	22	82022	71
80447	137	80628	11	80703	195	80809	47	80914	225	81010	22	82023	71
80448	137	80629	11	80704	195	80810	47	80915	225	81011	33	82024	71
80449	137	80630	11	80705	195	80811	47	80916	225	81012	26	82032	78
80450	137	80631	11	80706	195	80812	47	80917	225	81013	26	82033	79
80451	137	80632	11	80707	195	80813	47	80918	225	81015	222	82034	79
80453	145	80633	11	80708	195	80814	47	80919	225	81016	222	82035	32
80454	145	80634	11	80709	195	80815	47	80920	225	81017	222	82036	32
80464	145	80635	11	80710	195	80816	47	80921	226	81018	223	82037	32
80479	147	80636	11	80711	195	80817	47	80922	226	81019	223	82038	61
80485	145	80637	11	80712	141	80818	54	80923	226	81020	223	82039	61
80486	145	80638	15	80713	143	80819	54	80924	226	81021	223	82040	75

Cod.	Pag.	Cod.	Pag.	Cod.	Pag.	Cod.	Pag.	Cod.	Pag.	Cod.	Pag.	Cod.	Pag.
82041	75	82125	20	82234	70	82573	46	82715	227	82833	72	83031	167
82042	64	82126	20	82235	70	82574	46	82716	227	82841	74	83033	167
82043	64	82127	19	82236	70	82575	46	82717	227	82842	74	83035	159
82044	64	82128	19	82237	70	82576	46	82718	227	82843	74	83036	159
82045	64	82129	19	82238	70	82577	46	82719	227	82844	74	83037	161
82046	67	82130	19	82239	70	82578	43	82720	227	82845	58	83038	161
82047	67	82131	19	82240	70	82579	81	82721	227	82846	58	83039	169
82048	65	82132	19	82241	70	82580	72	82722	227	82847	58	83040	167
82049	65	82134	197	82242	70	82581	72	82726	227	82848	35	83041	169
82050	65	82135	197	82243	70	82582	72	82727	227	82849	35	83042	171
82051	65	82136	199	82244	70	82583	72	82728	227	82850	36	83043	217
82052	66	82137	199	82245	70	82584	72	82729	227	82853	72	83044	171
82053	66	82138	202	82246	70	82585	72	82730	224	82855	72	83045	159
82054	66	82139	202	82247	70	82586	72	82731	224	82857	157	83046	159
82055	66	82140	203	82248	70	82587	72	82732	224	82858	157	83047	159
82056	67	82141	203	82249	70	82588	37	82733	224	82859	157	83048	161
82057	67	82144	205	82250	70	82590	221	82734	224	82860	157	83049	161
82058	67	82145	205	82251	73	82591	221	82735	224	82861	167	83050	161
82059	67	82146	206	82252	73	82611	69	82736	224	82862	167	83052	217
82060	72	82147	206	82253	73	82612	69	82737	224	82865	167	83053	217
82061	72	82148	207	82254	73	82613	69	82738	224	82866	167	83054	217
82062	72	82149	207	82256	78	82614	69	82739	224	82867	157	83055	217
82063	72	82150	19	82258	70	82615	69	82740	224	82868	157	83056	217
82064	72	82151	19	82259	70	82616	69	82741	224	82869	157	83057	217
82065	72	82152	19	82260	70	82617	69	82742	224	82870	157	83058	217
82066	72	82154	73	82261	70	82618	69	82743	224	82871	122	83059	217
82067	72	82155	73	82262	70	82619	69	82744	224	82872	122	83060	217
82068	62	82156	73	82263	70	82620	69	82745	224	82873	68	83061	217
82069	62	82157	73	82264	73	82621	69	82746	224	82880	183	83062	217
82070	10	82173	221	82392	137	82622	69	82747	224	82882	201	83063	217
82071	10	82174	221	82404	139	82624	70	82751	46	82886	183	83064	217
82072	12	82175	221	82408	157	82625	70	82764	159	82911	78	83065	217
82073	12	82176	221	82409	157	82626	70	82764	159	82912	78	83066	217
82074	196	82177	221	82478	169	82627	70	82764	161	82913	96	83067	217
82075	196	82178	221	82505	81	82628	70	82764	161	82916	91	83068	217
82076	196	82179	221	82516	221	82629	70	82765	159	82917	96	83073	211
82077	196	82180	221	82526	74	82630	73	82765	159	82918	96	83074	211
82078	196	82181	221	82528	74	82632	13	82765	159	82919	96	83075	211
82079	196	82182	221	82529	74	82633	13	82765	161	82920	96	83076	211
82080	226	82183	221	82530	74	82640	26	82765	161	82949	26	83077	211
82081	226	82184	221	82532	65	82652	141	82765	161	82968	204	83078	211
82082	226	82201	68	82533	65	82658	58	82766	157	82970	204	83079	211
82083	222	82202	68	82534	65	82664	81	82767	157	82971	56	83081	211
82084	222	82203	68	82535	65	82680	126	82770	167	82972	204	83082	211
82085	223	82204	68	82536	66	82681	126	82771	167	82974	204	83083	211
82086	223	82205	69	82537	66	82682	78	82772	169	82976	204	83084	211
82102	17	82206	69	82538	66	82683	26	82773	171	82978	204	83085	211
82104	17	82207	69	82539	66	82695	224	82774	167	82980	204	83086	211
82105	17	82208	69	82549	137	82696	224	82775	167	82982	204	83087	211
82106	18	82215	79	82555	83	82697	224	82776	169	82984	204	83089	107
82107	17	82217	79	82556	83	82698	224	82777	171	82986	204	83090	123
82108	18	82218	79	82557	83	82699	224	82789	72	82988	204	83091	123
82109	17	82219	68	82558	83	82700	224	82797	68	82990	204	83092	123
82110	18	82220	68	82559	83	82701	224	82805	37	82992	204	83093	123
82111	24	82221	68	82560	83	82702	224	82806	39	82994	204	83094	123
82112	21	82222	68	82561	83	82703	224	82807	39	82998	11	83095	123
82113	21	82223	69	82562	83	82704	224	82808	39	82999	11	83096	123
82114	22	82224	69	82563	83	82705	224	82809	90	83003	92	83097	123
82115	22	82225	69	82564	83	82706	224	82810	90	83004	92	83098	123
82116	22	82226	69	82565	83	82707	227	82811	91	83005	93	83099	123
82118	226	82227	70	82566	83	82708	227	82812	61	83006	93	83100	123
82119	226	82228	70	82567	83	82709	227	82813	61	83007	96	83101	123
82120	226	82229	70	82568	83	82710	227	82827	75	83021	107	83110	12
82121	226	82230	70	82569	41	82711	227	82828	75	83023	169	83113	40
82122	226	82231	70	82570	41	82712	227	82829	75	83025	171	83115	59
82123	226	82232	70	82571	41	82713	227	82830	75	83027	167	83116	36
82124	20	82233	70	82572	41	82714	227	82831	75	83029	171	83117	59

Cod.	Pag.	Cod.	Pag.	Cod.	Pag.	Cod.	Pag.	Cod.	Pag.	Cod.	Pag.	Cod.	Pag.
83128	80	83231	199	83299	195	83526	210	83593	210	83761	219	83881	110
83138	80	83232	202	83300	195	83527	210	83594	214	83762	213	83882	109
83145	211	83233	202	83301	195	83528	210	83595	214	83763	213	83890	107
83155	211	83234	202	83302	36	83529	210	83606	127	83764	213	83895	83
83156	190	83235	202	83303	36	83530	210	83607	127	83765	213	83907	155
83157	190	83236	202	83304	46	83531	210	83608	127	83766	213	83911	222
83158	191	83237	202	83305	46	83532	210	83626	109	83767	213	83912	223
83159	191	83238	203	83306	46	83533	210	83640	33	83768	213	83913	223
83160	192	83239	203	83307	70	83534	210	83652	133	83769	213	83914	223
83161	192	83240	203	83309	70	83535	210	83653	133	83770	213	83915	223
83162	194	83241	203	83313	70	83536	210	83682	173	83771	213	83916	222
83163	194	83242	203	83314	70	83537	210	83683	173	83772	213	83917	222
83164	195	83243	203	83319	101	83538	210	83684	173	83773	213	83918	222
83165	195	83244	205	83357	98	83539	210	83685	173	83774	213	83919	222
83166	193	83245	205	83359	98	83540	216	83686	173	83775	213	83920	222
83167	193	83246	205	83361	99	83541	216	83687	173	83776	213	83921	222
83168	193	83247	205	83363	99	83542	216	83688	175	83777	213	83922	222
83169	193	83248	205	83372	102	83543	216	83689	175	83778	213	83923	222
83170	193	83249	205	83378	126	83544	216	83690	175	83779	213	83924	222
83171	193	83250	206	83380	100	83545	216	83691	177	83784	209	83925	222
83172	193	83251	206	83390	44	83546	216	83692	177	83785	209	83926	222
83173	193	83252	206	83391	44	83547	216	83693	177	83786	209	83927	225
83174	193	83253	206	83392	44	83548	216	83696	173	83787	209	83928	225
83175	193	83254	206	83393	44	83549	216	83697	173	83788	209	83929	225
83176	193	83255	206	83394	44	83550	216	83698	173	83789	209	83930	226
83177	193	83256	207	83395	45	83551	216	83699	173	83790	209	83931	226
83178	193	83257	207	83396	45	83552	216	83700	173	83791	209	83932	226
83179	193	83258	207	83398	38	83553	216	83701	173	83792	209	83933	226
83180	193	83259	207	83399	38	83554	216	83702	175	83793	209	83934	222
83181	193	83260	207	83410	200	83555	216	83703	175	83794	209	83958	208
83182	193	83261	207	83411	124	83556	216	83704	175	83795	209	83960	208
83183	193	83262	204	83412	124	83557	216	83705	177	83796	209	83961	208
83184	194	83263	211	83413	124	83558	214	83706	177	83797	209	83962	208
83185	194	83264	204	83414	124	83559	214	83707	177	83798	209	83963	208
83186	194	83266	188	83415	124	83560	214	83717	114	83799	209	83964	208
83187	194	83267	188	83416	124	83561	214	83718	114	83800	209	83965	208
83188	194	83268	189	83417	124	83562	214	83719	114	83801	209	83966	208
83189	194	83269	189	83418	124	83563	214	83720	114	83802	215	83967	208
83200	10	83270	190	83419	124	83564	214	83721	115	83803	215	83968	208
83201	10	83271	190	83420	124	83565	214	83722	115	83804	215	83969	208
83202	10	83272	190	83421	124	83566	214	83723	115	83805	215	83970	208
83203	10	83273	190	83422	124	83567	214	83724	115	83806	215	83971	208
83204	11	83274	190	83423	124	83568	214	83725	115	83807	215	83973	117
83205	11	83275	190	83424	124	83569	214	83726	113	83808	215	83989	157
83206	11	83276	191	83425	124	83570	214	83727	113	83809	215	83990	157
83207	11	83277	191	83441	110	83571	214	83728	113	83810	215	83991	157
83208	12	83278	191	83442	109	83572	214	83732	109	83811	215	83992	159
83209	211	83279	191	83445	133	83573	214	83733	109	83812	215	83993	159
83210	13	83280	191	83446	133	83574	220	83734	109	83813	215	83994	159
83211	13	83281	191	83449	133	83575	220	83735	109	83814	215	83995	161
83214	197	83282	192	83450	133	83576	220	83744	219	83815	215	83996	161
83215	197	83283	192	83451	133	83577	220	83745	219	83816	215	83997	161
83216	197	83284	192	83452	133	83578	220	83746	219	83817	215	83999	163
83217	197	83285	192	83462	139	83579	220	83747	219	83818	215	84000	163
83218	197	83286	192	83465	217	83580	220	83748	219	83819	215	84001	163
83219	197	83287	192	83466	137	83581	220	83749	219	83822	209	84002	163
83220	198	83288	193	83467	137	83582	220	83750	219	83823	209	84003	163
83221	198	83289	193	83468	141	83583	220	83751	219	83824	209	84005	163
83222	198	83290	193	83473	94	83584	220	83752	219	83825	209	84006	163
83223	198	83291	193	83474	94	83585	220	83753	219	83826	209	84007	165
83224	198	83292	193	83475	95	83586	220	83754	219	83827	209	84008	165
83225	198	83293	193	83476	95	83587	220	83755	219	83828	143	84009	165
83226	199	83294	194	83503	61	83588	220	83756	219	83829	143	84010	163
83227	199	83295	194	83504	61	83589	220	83757	219	83831	208	84011	165
83228	199	83296	194	83520	143	83590	220	83758	219	83860	125	84012	165
83229	199	83297	194	83524	210	83591	220	83759	219	83871	46	84013	165
83230	199	83298	195	83525	210	83592	210	83760	219	83879	109	84014	157

Cod.	Pag.	Cod.	Pag.	Cod.	Pag.	Cod.	Pag.	Cod.	Pag.	Cod.	Pag.	Cod.	Pag.
84015	157	84146	143	84303	109	84510	151	84593	137	84660	151	84729	167
84016	157	84147	143	84304	71	84511	151	84594	137	84661	151	84730	167
84017	157	84148	155	84305	71	84513	153	84595	137	84662	151	84731	167
84018	157	84150	155	84306	71	84514	153	84596	137	84663	151	84732	167
84019	159	84153	228	84307	71	84515	157	84597	137	84664	151	84733	167
84020	161	84154	228	84308	71	84516	157	84598	137	84665	151	84734	167
84021	163	84155	228	84309	221	84517	159	84599	137	84666	151	84735	167
84022	163	84156	228	84311	221	84518	159	84600	137	84667	151	84736	167
84023	163	84157	228	84316	40	84519	161	84601	137	84668	153	84737	167
84024	163	84158	228	84318	201	84520	161	84602	137	84669	153	84738	169
84025	59	84159	228	84323	16	84521	163	84603	137	84670	153	84739	169
84038	137	84160	228	84324	14	84522	165	84604	137	84671	153	84740	169
84039	137	84161	228	84325	16	84523	167	84605	137	84672	153	84741	169
84040	137	84162	228	84326	16	84524	167	84606	137	84673	153	84742	169
84041	137	84165	119	84327	50	84525	167	84607	137	84674	153	84743	169
84042	139	84166	119	84328	30	84526	167	84608	137	84675	153	84744	169
84043	141	84167	119	84329	30	84527	169	84609	137	84676	157	84745	169
84044	141	84168	119	84330	30	84528	169	84610	137	84677	157	84746	169
84045	143	84169	119	84331	31	84529	171	84611	137	84678	157	84747	169
84046	143	84180	71	84332	31	84530	171	84612	139	84679	157	84748	171
84048	167	84182	106	84333	31	84531	173	84613	139	84680	157	84749	171
84049	167	84183	106	84334	28	84532	173	84614	139	84681	157	84750	171
84050	167	84185	106	84335	28	84533	173	84615	139	84682	157	84751	171
84051	167	84190	216	84336	28	84534	173	84616	139	84683	157	84752	171
84052	167	84191	217	84337	28	84535	175	84617	139	84684	157	84753	171
84053	167	84193	219	84338	28	84536	175	84618	139	84685	157	84754	171
84054	167	84195	220	84339	28	84537	177	84619	139	84686	157	84755	171
84055	167	84196	110	84440	14	84538	177	84620	139	84687	157	84756	171
84056	169	84197	110	84442	50	84539	157	84621	139	84688	157	84757	171
84057	169	84198	109	84443	50	84540	157	84622	139	84689	157	84758	173
84058	169	84199	109	84444	124	84541	163	84623	139	84690	157	84759	173
84059	169	84203	130	84445	124	84542	33	84624	139	84691	157	84760	173
84060	171	84205	130	84446	124	84543	33	84625	139	84692	157	84761	173
84061	171	84206	130	84473	34	84544	33	84626	139	84693	157	84762	173
84062	171	84207	131	84474	118	84545	81	84627	139	84694	157	84763	173
84063	171	84208	132	84475	118	84546	81	84628	141	84695	157	84764	173
84069	63	84209	132	84476	118	84547	97	84629	141	84696	159	84765	173
84070	63	84226	33	84477	118	84548	90	84630	141	84697	159	84766	173
84071	63	84244	79	84478	118	84549	90	84631	141	84698	159	84767	173
84072	63	84245	79	84479	123	84550	91	84632	141	84699	159	84768	173
84076	173	84246	79	84480	123	84551	91	84633	141	84700	159	84769	173
84077	173	84247	79	84481	123	84552	92	84634	141	84701	159	84770	173
84078	173	84251	79	84482	123	84553	92	84635	141	84702	159	84771	173
84079	173	84253	79	84483	123	84555	93	84636	141	84703	159	84772	173
84080	175	84258	47	84485	49	84556	93	84637	141	84704	159	84773	173
84081	175	84259	47	84486	49	84557	94	84638	141	84705	159	84774	175
84082	177	84260	40	84487	48	84558	94	84639	141	84706	161	84775	175
84083	177	84270	187	84488	48	84559	95	84640	141	84707	161	84776	175
84085	118	84271	187	84490	137	84560	95	84641	141	84708	161	84777	175
84086	118	84272	187	84491	137	84563	80	84642	141	84709	161	84778	175
84091	127	84273	187	84492	137	84575	87	84643	141	84710	161	84779	175
84109	46	84274	187	84493	139	84576	84	84644	149	84711	161	84780	175
84113	131	84275	187	84494	139	84577	118	84645	149	84712	161	84781	175
84119	37	84276	187	84495	139	84578	118	84646	149	84713	161	84782	177
84120	38	84277	187	84496	141	84580	137	84647	149	84714	161	84783	177
84121	118	84278	187	84497	141	84581	137	84648	149	84715	161	84784	177
84122	118	84279	187	84498	141	84582	137	84649	149	84718	167	84785	177
84123	118	84280	187	84499	145	84583	137	84650	149	84719	167	84786	177
84124	37	84281	187	84500	137	84584	137	84651	149	84720	167	84787	177
84128	27	84282	187	84501	137	84585	137	84652	149	84721	167	84788	177
84130	27	84283	187	84502	137	84586	137	84653	149	84722	167	84789	177
84131	106	84284	187	84503	145	84587	137	84654	149	84723	167	84800	111
84132	15	84285	187	84505	147	84588	137	84655	149	84724	167	84801	111
84133	15	84286	187	84506	149	84589	137	84656	149	84725	167	84802	111
84134	216	84287	187	84507	149	84590	137	84657	149	84726	167	84803	111
84135	219	84288	187	84508	149	84591	137	84658	149	84727	167	84804	111
84136	220	84289	187	84509	149	84592	137	84659	149	84728	167	84805	111

Cod.	Pag.
84806	111
84807	111
84808	110
84809	110
84810	110
84811	110
84814	78
84816	102
84817	101
84818	100
84819	218
84820	218
84821	218
84822	218
84823	218
84824	218
84825	218
84826	218
84827	218
84828	218
84829	218
84830	218
84837	212
84838	212
84839	212
84840	212
84841	212
84842	212
84843	212
84844	212
84845	212
84846	212
84847	212
84848	212
84849	212
84850	212
84851	212
84852	212
84853	212
84854	212
84855	212
84856	212
84857	212
84862	212
84863	212
84864	212
84865	81
84868	81
84870	34
84875	137
84876	137
84877	137
84878	137
84883	139
84884	139
84887	141
84888	141
84891	149
84892	149
84893	149
84894	149
84899	151
84900	151
84903	153
84904	153
84907	167
84908	167
84909	167
84910	167
84915	169
84916	169
84919	171
84920	171
84923	173
84924	173
84925	173
84926	173
84931	175
84932	175
84936	177
84937	177
84940	118
84941	118
84942	118
84943	118
84944	118
84945	118
84946	118
84947	118
84948	118
84949	118
84950	118
84951	118
84952	118
84953	118
84954	118
84955	118
84956	118
84957	118
84961	50
84979	157
84980	157
84981	157
84982	157
84983	159
84984	159
84985	161
84986	161
84994	108
84995	108
84996	108
84997	108
84998	108
84999	108
85000	108
85001	108
85002	85
85003	85
85004	84
85005	88
85006	88
85007	87
85009	53
85031	84
85032	87
85063	60
85064	60
85065	122
85066	122
85067	83
85068	78
85069	78
85070	78
85071	78
85072	78
85073	78
85074	79
85075	79
85076	79
85077	79
85078	79
85079	79
85080	86
85081	86
85082	89
85083	89
85084	86
85085	86
85086	89
85087	89
85088	218
85089	218
85090	226
85091	226
85092	226
85093	53
85094	53
85095	53
85096	81
85097	53
85098	53
85099	53
85100	53
85101	50
85108	10
85109	10
85110	12
85111	12
85112	13
85113	13
85114	15
85115	15
85116	187
85117	188
85118	189
85119	190
85120	190
85121	190
85122	190
85123	192
85124	192
85125	192
85126	192
85127	193
85128	193
85129	193
85130	193
85131	194
85132	194
85133	194
85134	195
85135	195
85136	195
85137	197
85138	198
85139	199
85140	187
85141	221
85142	222
85143	222
85144	222
85145	222
85146	222
85147	222
85148	222
85149	222
85150	223
85151	223
85152	223
85153	223
85154	223
85155	223
85156	223
85157	225
85158	226
85159	226
85160	226
85161	226
85162	226
85163	226
85164	215
85165	215
85166	59
85167	59
85168	59
85169	59
85170	187
85171	191
85172	191
85173	191
85174	191
85180	137
85181	137
85182	139
85183	141
85184	127
85185	127
85186	67
85195	213
85196	213
85198	213
85199	213
85202	139
85202	141
85202	151
85202	153
85202	159
85202	161
85202	169
85202	171
85202	175
85202	177
85203	139
85203	141
85203	151
85203	153
85203	169
85203	171
85203	175
85203	177
85204	139
85204	141
85204	147
85204	165
85206	159
85206	161
85215	27
85217	149
85218	149
85219	149
85220	149
85221	149
85222	149
85223	149
85224	149
85225	151
85226	151
85227	151
85228	151
85229	153
85230	153
85231	153
85232	153
85233	155
85234	155
85235	97
85237	112
85238	112
85239	52
85240	51
85241	29
85242	29
85246	143
85247	143
85248	143
85249	143
85250	143
85251	143
85252	143
85253	143
85254	143
85255	143
85256	143
85257	143
85258	143
85259	143
85260	143
85261	143
85262	143
85263	143
85264	155
85265	155
85266	155
85267	155
85268	155
85269	155
85270	155
85271	155
85272	100
85273	101
85274	102
85275	51
85308	121
85309	121
85337	65
85338	65
85339	65
85340	65
85346	71
85347	71
85348	71
85349	71
85355	116
85356	116
85357	116
85358	116
85374	103
85375	104
85376	105
85377	103
85378	104
85379	105
85381	46
85416	76
85417	76
85418	76
85419	76
85420	76
85421	76
85422	76
85423	76
85424	77
85425	77
85426	77
85427	77
85428	76
85429	76
85430	76
85431	76
85435	77
85436	77
85441	173
85443	173
85445	173
85446	173
85447	173
85448	173
85449	173
85450	173
85451	175
85452	175
85453	175
85454	175
85455	177
85456	177
85457	177
85458	177
85459	103
85460	104
85461	105
85462	72
85463	72
85464	72
85465	72
85466	72
85467	103
85468	104
85469	105
85470	46
85473	120
85475	193
85476	117
85477	193
85479	193
85481	193
85483	194
85484	109
85485	194
85486	109
85487	194
85488	109
85489	194
85491	195
85493	195
85495	195
85497	195
85499	211
85501	211
85503	211
85505	211
85515	214
85517	214
85519	214
85521	214
86717	100
86718	101
86719	102
86726	109
86727	78
86728	78

The reproduction, even partial, of the present catalogue is strictly forbidden by force of law

Tecom reserves the right to make all the necessary changes required by the evolutionary development, both in the designs and dimensions of the illustrated products

For further information, please contact our Technical Commercial Departement

TECOM S.r.l.
Via A.M. Ampére, 43 - 42017 Novellara (RE) - Italy
Tel.: (+39) 0522-651203 Fax.: (+39) 0522-756251
Web: http://www.tecomsrl.it e-mail: info@tecomsrl.it